An elevation and end elevation of a coat hook are shown below.
A 3D Graphic showing a pictorial sectioned view is also shown.

(a) Project a full size sectional elevation A-A

(b) In the space provided, determine the blank size of material required in order to make the coat hook.

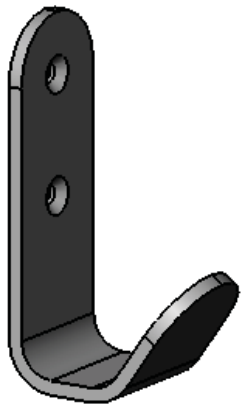

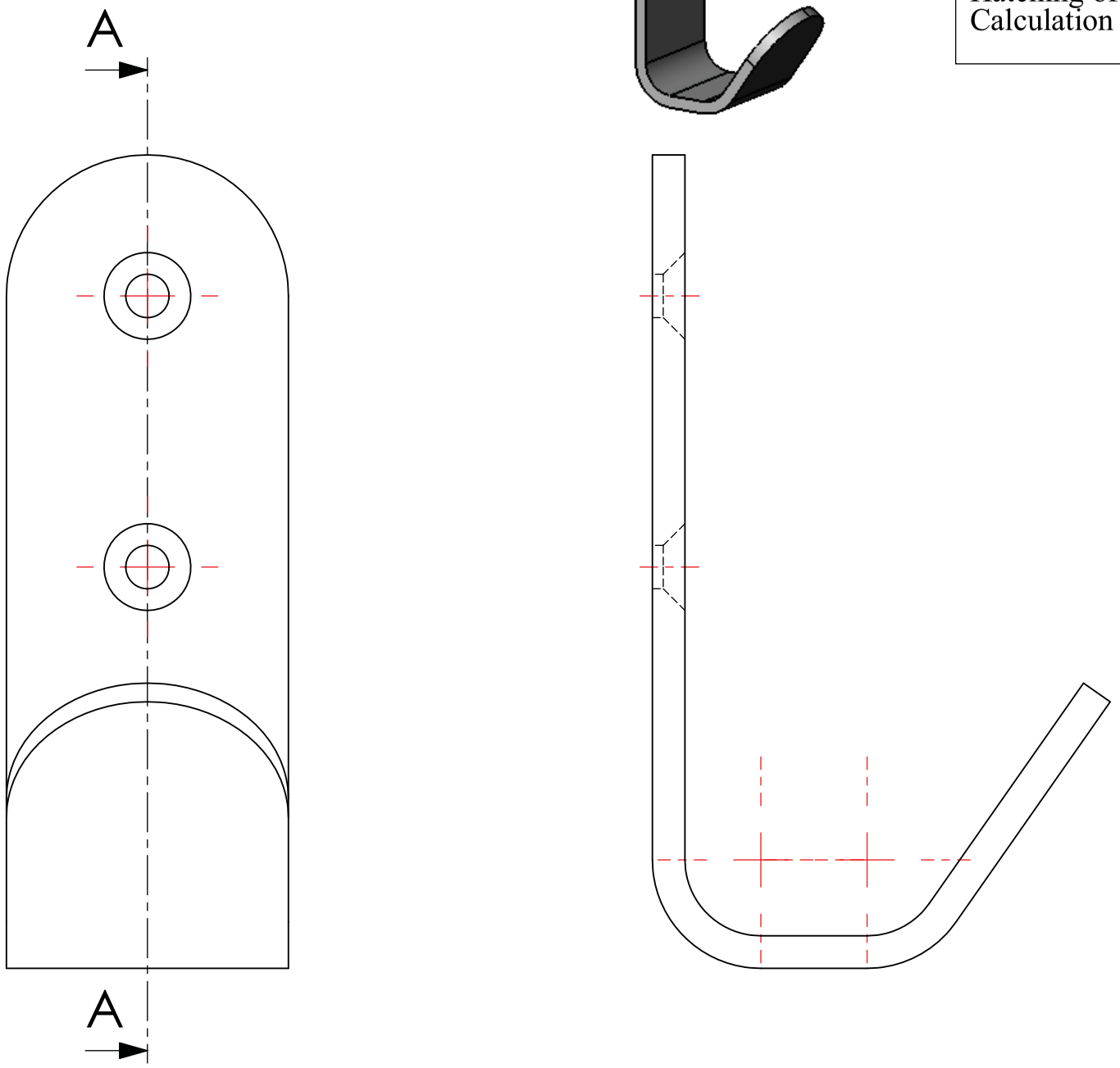

Key Points

Use of centrelines to indicate hole/curve centres
Positioning of sectionview cut by section plane
Representation of the direction of the cut view using arrows
Title of section A-A
Hatching of the cut surface @ 45
Calculation of the mean length of material required

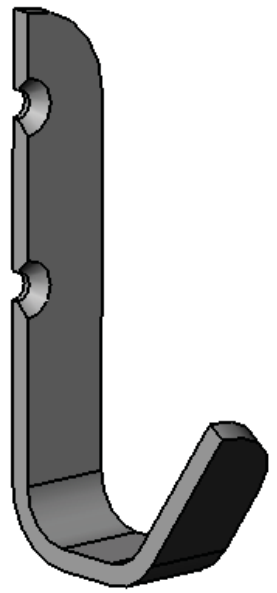

Determine the blank size of material required in order to make the coat hook.

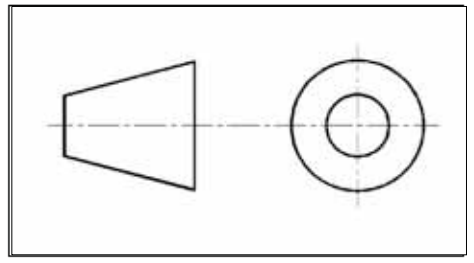

TECHNOLOGY SUBJECTS SUPPORT SERVICE

DESIGN & COMMUNICATION GRAPHICS

Topic.....

NAME: _____ **DATE:** _____

An elevation and end elevation of a coat hook are shown below.
A 3D Graphic showing a pictorial sectioned view is also shown.

(a) Project a full size sectional elevation A-A

(b) In the space provided, determine the blank size of material required in order to make the coat hook.

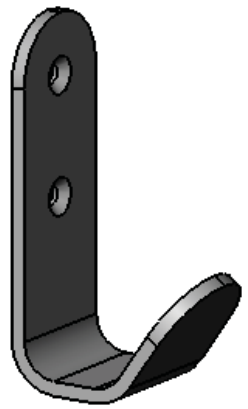

Key Points

Use of centrelines to indicate hole/curve centres
Positioning of sectionview cut by section plane
Representation of the direction of the cut view using arrows
Title of section A-A
Hatching of the cut surface @ 45
Calculation of the mean length of material required

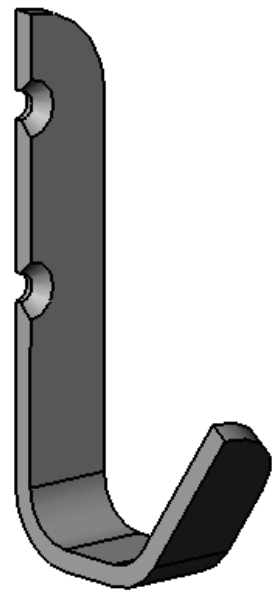

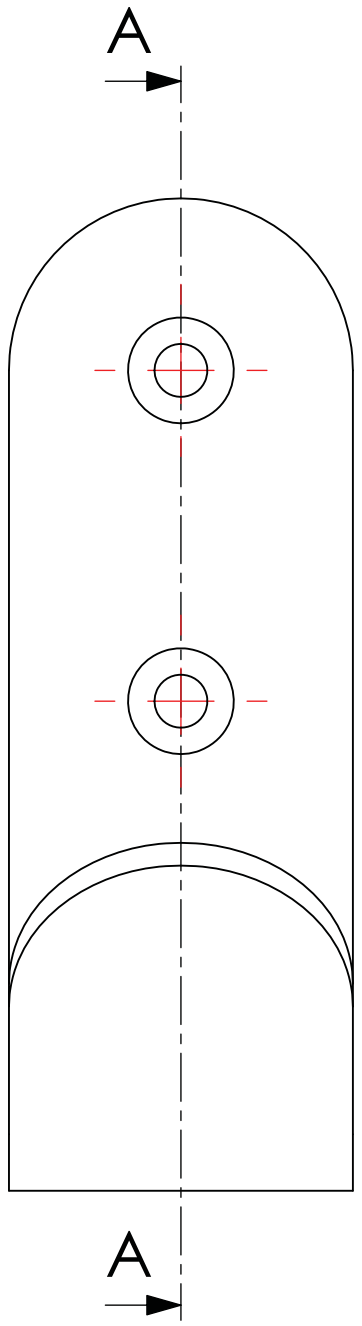

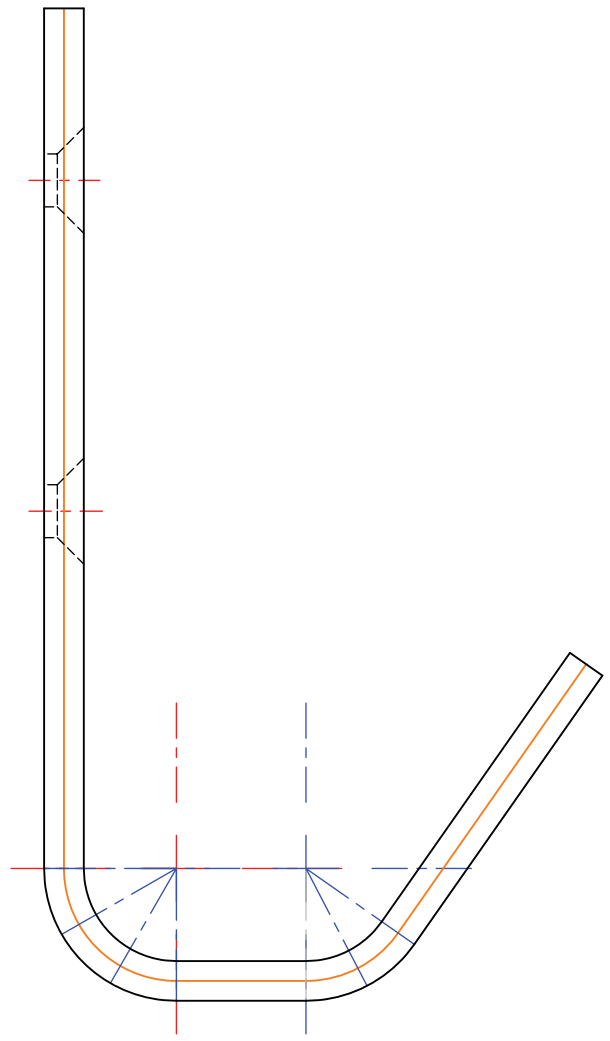

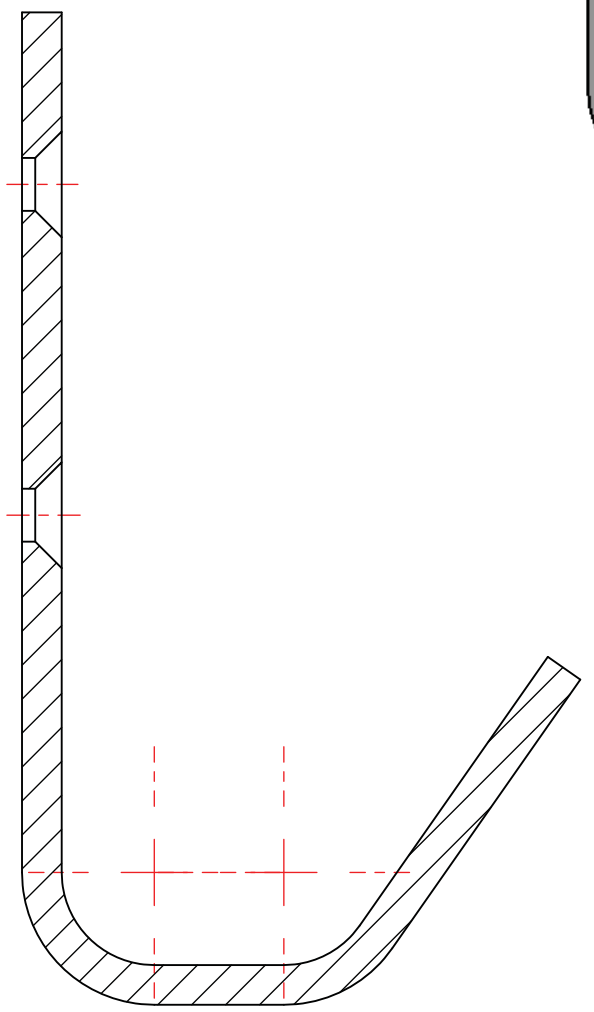

SECTION A-A
SCALE 1.75 : 1

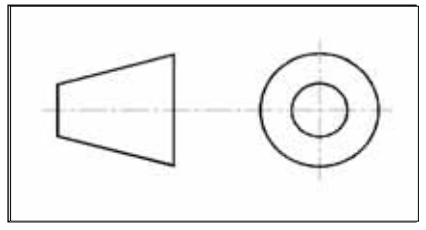

Determine the blank size of material required in order to make the coat hook.

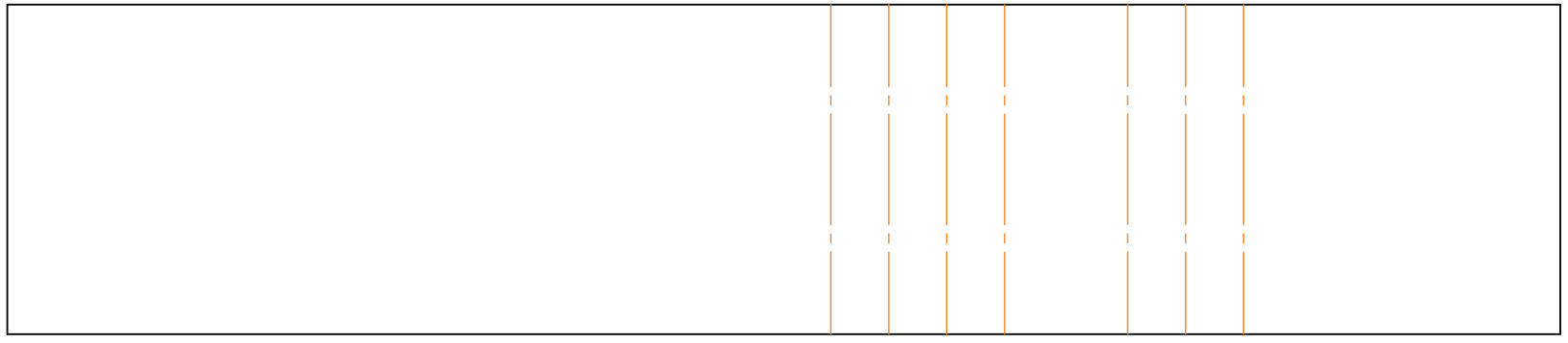

TECHNOLOGY SUBJECTS SUPPORT SERVICE

DESIGN & COMMUNICATION GRAPHICS

Topic.....

NAME: _____ **DATE:** _____

Details of a ball pump are given below along with the parts list. An exploded view of the pump is also shown. A local section of the valve assembly is shown on the right.

(a) On the accompanying sheet, draw, using a scale of 2:1, a sectional elevation C-C of the assembly when the plunger is at half displacement.

(b) Dimension the length of travel of the plunger in a half stroke.

(c) The handle of the pump has proven uncomfortable to use. In the space provided, using a rendered freehand sketch, present a more suitable handle for the pump.

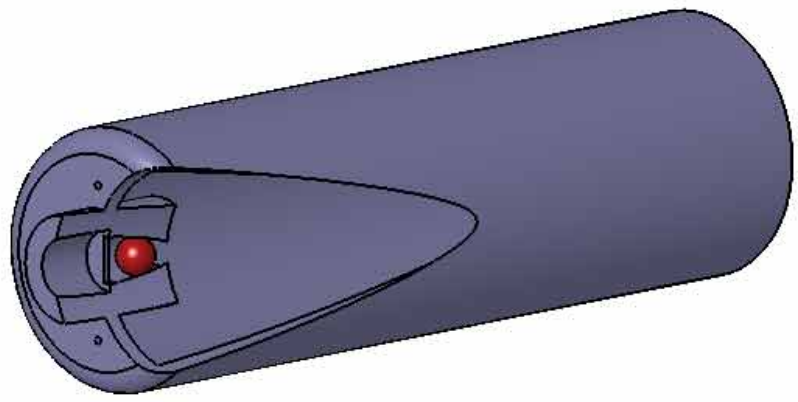

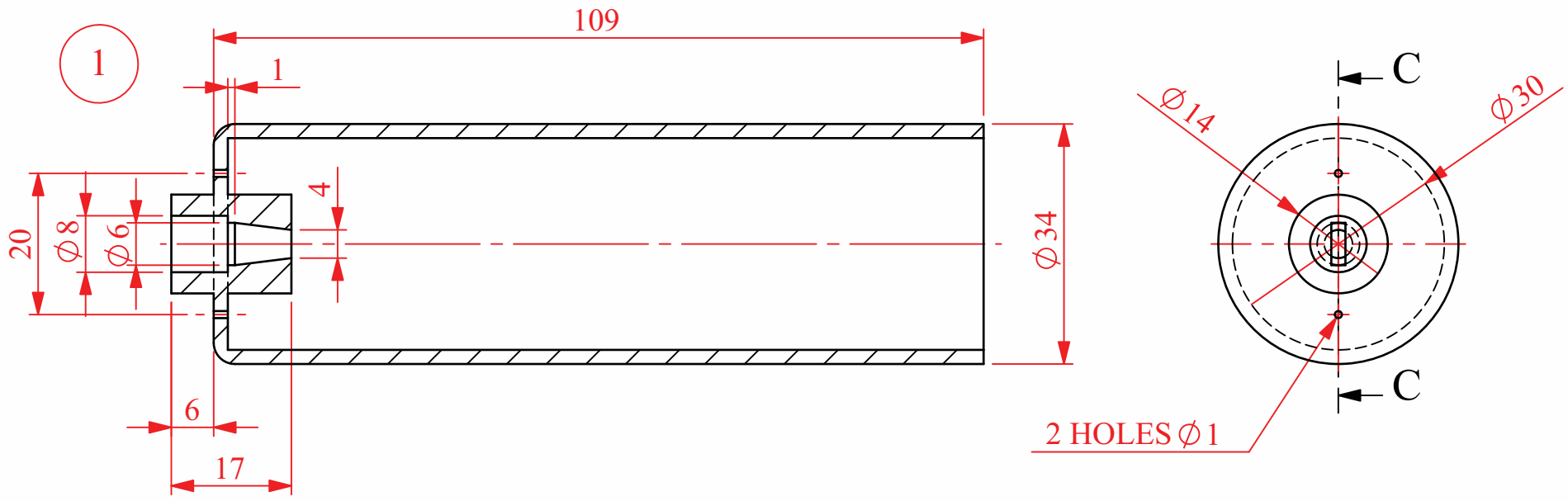

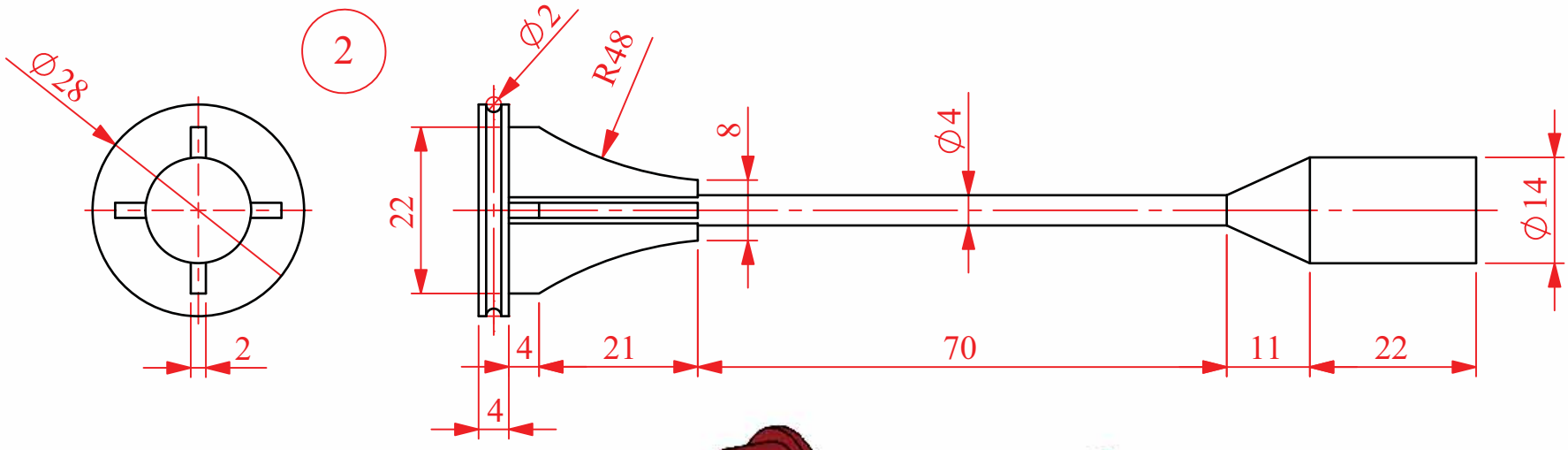

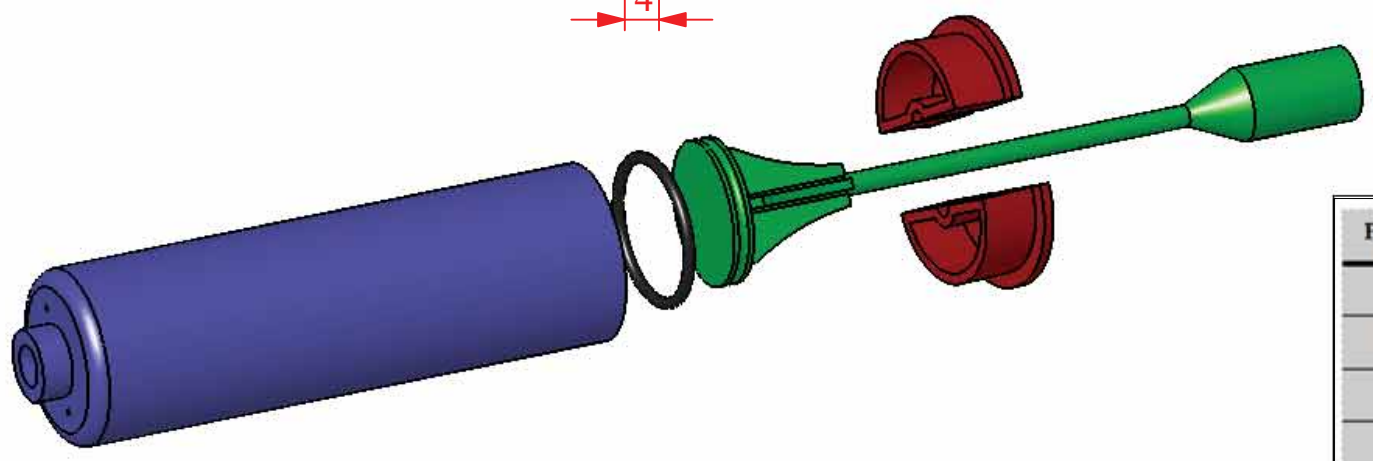

PART	NAME	NO. REQUIRED
1	Pump Casing	1
2	Plunger	1
3	Cap	2
4	Seal	1
5	Non Return Ball Seal	1

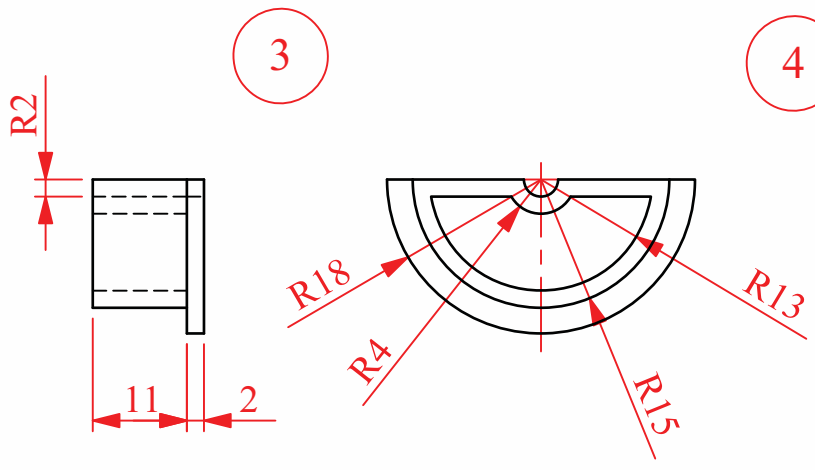

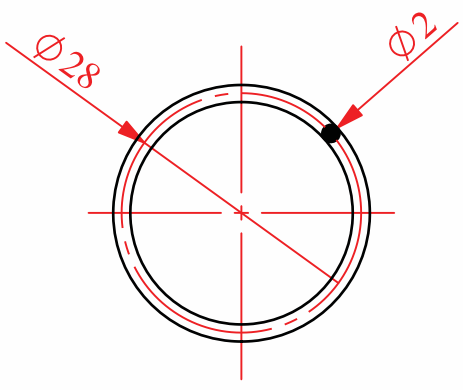

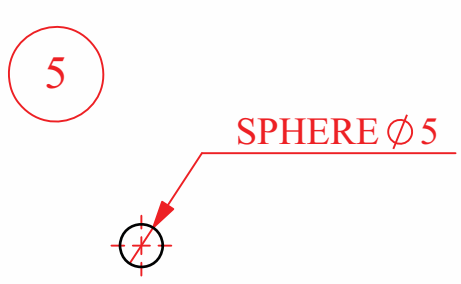

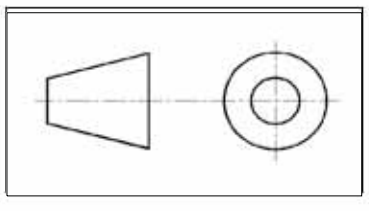

TECHNOLOGY SUBJECTS SUPPORT SERVICE

DESIGN & COMMUNICATION GRAPHICS

Topic.....

NAME: _____ **DATE:** _____

Details of a ball pump are given below along with the parts list. An exploded view of the pump is also shown. A local section of the valve assembly is shown on the right.

(a) On the accompanying sheet, draw, using a scale of 2:1, a sectional elevation C-C of the assembly when the plunger is at half displacement.

(b) Dimension the length of travel of the plunger in a half stroke.

(c) The handle of the pump has proven uncomfortable to use. In the space provided, using a rendered freehand sketch, present a more suitable handle for the pump.

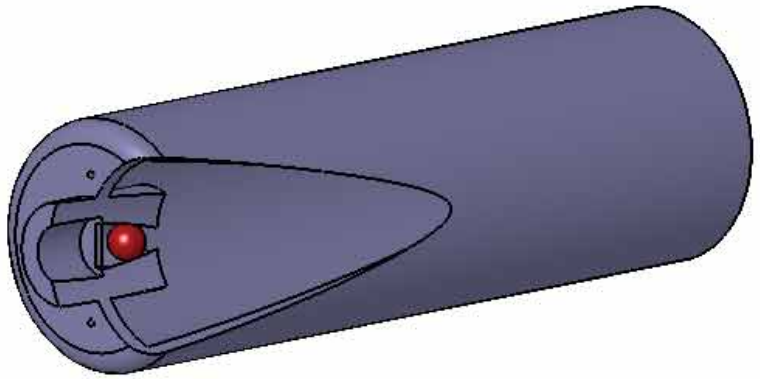

PART	NAME	NO. REQUIRED
1	Pump Casing	1
2	Plunger	1
3	Cap	2
4	Seal	1
5	Non Return Ball Seal	1

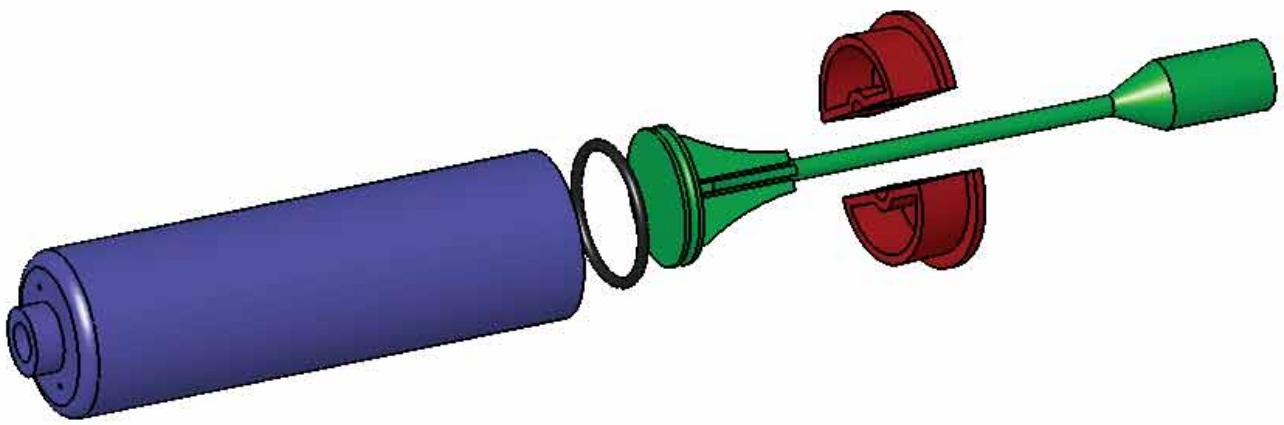

The handle of the pump has proven uncomfortable to use. Using a freehand sketch, present a more suitable handle for the pump.

TECHNOLOGY SUBJECTS SUPPORT SERVICE

DESIGN & COMMUNICATION GRAPHICS

Topic.....

NAME: _____ **DATE:** _____

Details of a ball pump are given below along with the parts list. An exploded view of the pump is also shown. A local section of the valve assembly is shown on the right.

(a) On the accompanying sheet, draw, using a scale of 2:1, a sectional elevation C-C of the assembly when the plunger is at half displacement.

(b) Dimension the length of travel of the plunger in a half stroke.

(c) The handle of the pump has proven uncomfortable to use. In the space provided, using a rendered freehand sketch, present a more suitable handle for the pump.

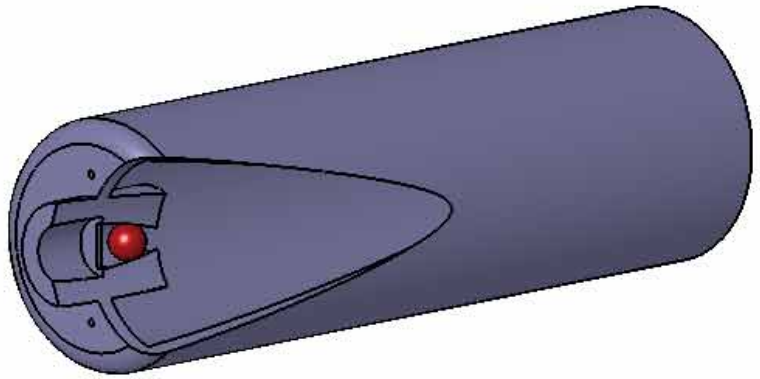

PART	NAME	NO. REQUIRED
1	Pump Casing	1
2	Plunger	1
3	Cap	2
4	Seal	1
5	Non Return Ball Seal	1

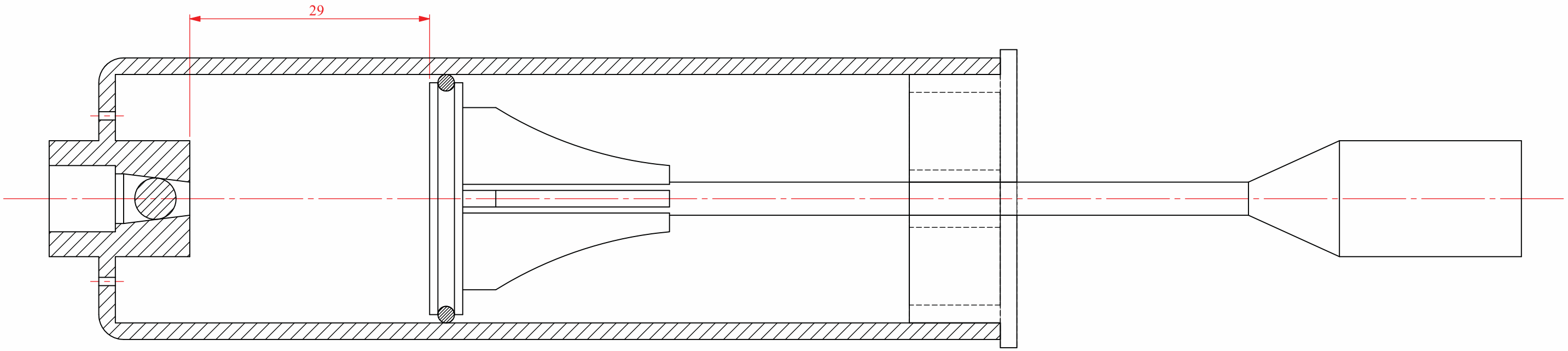

SECTION C-C
SCALE 2 : 1

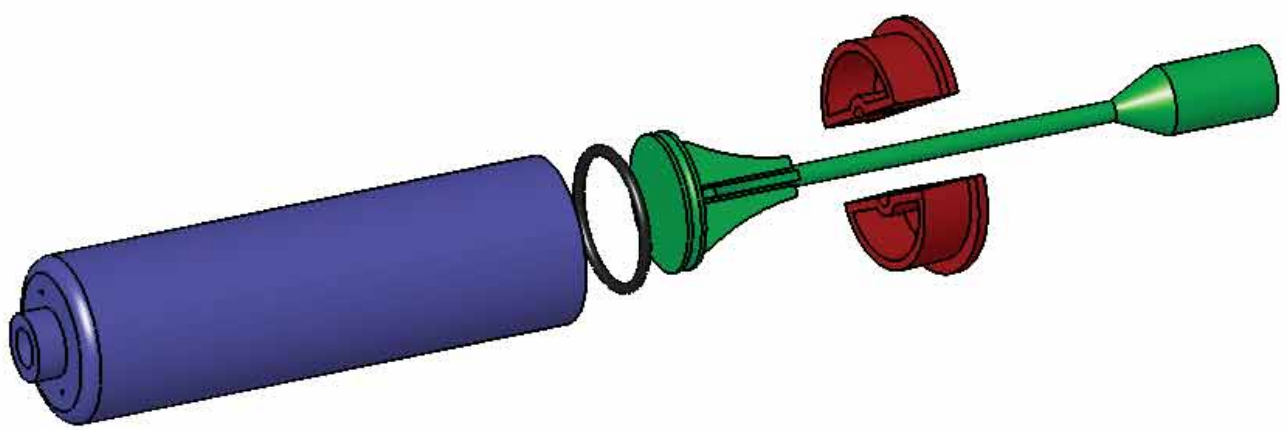

The handle of the pump has proven uncomfortable to use. Using a freehand sketch, present a more suitable handle for the pump.

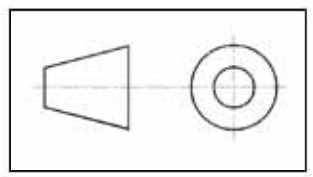

TECHNOLOGY SUBJECTS SUPPORT SERVICE

DESIGN & COMMUNICATION GRAPHICS

Topic.....

NAME: _____ **DATE:** _____

Details of a Pedal Assembly for a childs bike are given along with the parts list.
A 3D graphic of the assembly is also given.

(a) On the accompanying sheet, using a scale of 2:1, draw the elevation and sectional plan A-A of the assembled pedal.

(b) Add balloon referencing to identify the parts in the section view

(c) The surface of the pedal is very smooth and hence leads to the childs foot slipping off repeatedly. Using a suitable freehand sketch, in the space provided, suggest a means of reducing this problem

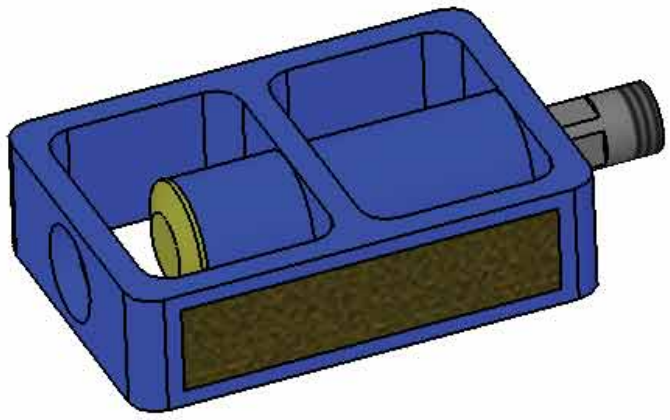

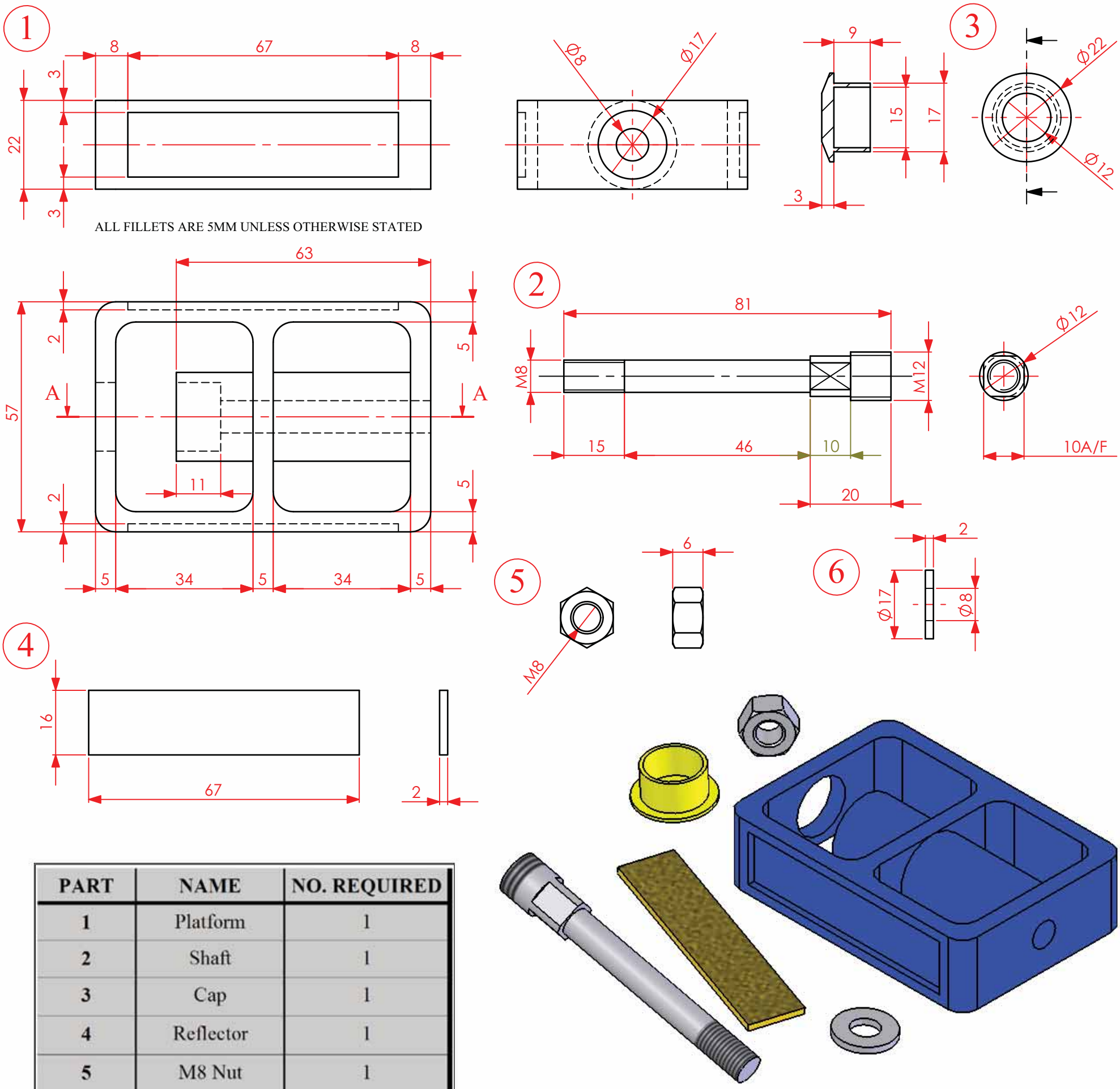

PART	NAME	NO. REQUIRED
1	Platform	1
2	Shaft	1
3	Cap	1
4	Reflector	1
5	M8 Nut	1
6	Washer	1

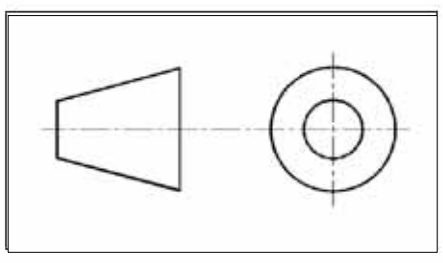

TECHNOLOGY SUBJECTS SUPPORT SERVICE

DESIGN & COMMUNICATION GRAPHICS

Topic.....

NAME: _____ **DATE:** _____

Details of a Pedal Assembly for a childs bike are given below with the parts list tabulated on the right.
A 3D graphic of the assembly is also given.

(a) On the accompanying sheet, using a scale of 2:1, draw the elevation and sectional plan A-A of the assembled pedal.

(b) Add balloon referencing to identify the parts in the section view

(c) The surface of the pedal is very smooth and hence leads to the childs foot slipping off repeatedly. Using a suitable freehand sketch, in the space provided, suggest a means of reducing this problem

PART	NAME	NO. REQUIRED
1	Platform	1
2	Shaft	1
3	Cap	1
4	Reflector	1
5	M8 Nut	1
6	Washer	1

The surface of the pedal is very smooth and hence leads to the childs foot slipping off repeatedly. Using a suitable freehand sketch, in the suggest a means of reducing this problem

TECHNOLOGY SUBJECTS SUPPORT SERVICE

DESIGN & COMMUNICATION GRAPHICS

Topic.....

NAME: _____ **DATE:** _____

Details of a Pedal Assembly for a childs bike are given below with the parts list tabulated on the right.
A 3D graphic of the assembly is also given.

(a) On the accompanying sheet, using a scale of 2:1, draw the elevation and sectional plan A-A of the assembled pedal.

(b) Add balloon referencing to identify the parts in the section view

(c) The surface of the pedal is very smooth and hence leads to the childs foot slipping off repeatedly. Using a suitable freehand sketch, in the space provided, suggest a means of reducing this problem

PART	NAME	NO. REQUIRED
1	Platform	1
2	Shaft	1
3	Cap	1
4	Reflector	1
5	M8 Nut	1
6	Washer	1

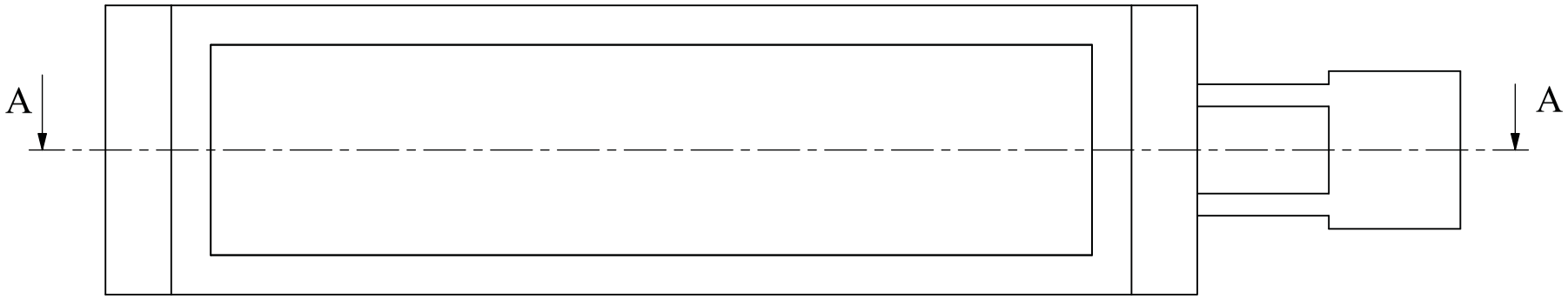

ELEVATION

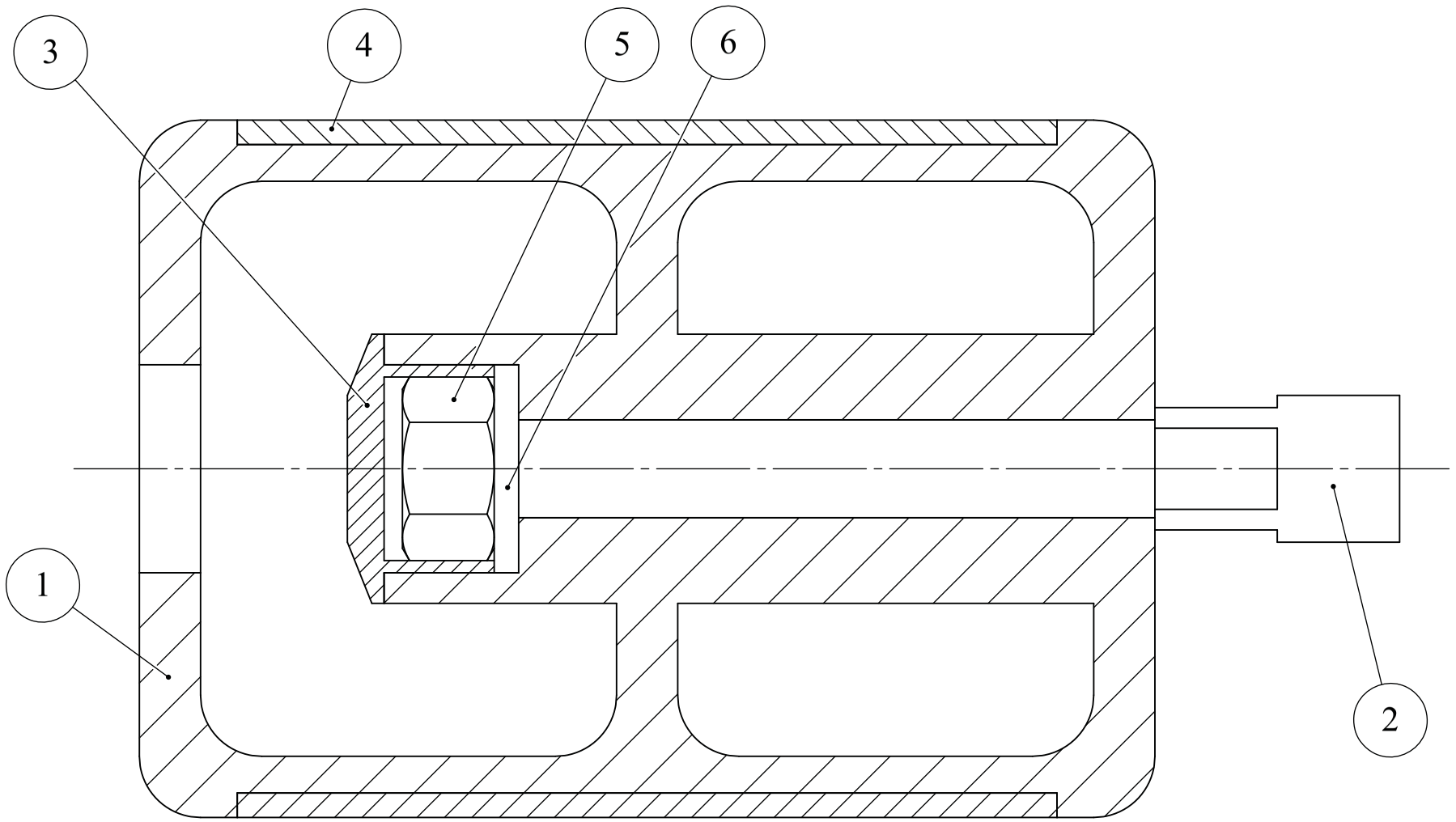

SECTION A-A

The surface of the pedal is very smooth and hence leads to the childs foot slipping off repeatedly. Using a suitable freehand sketch, in the suggest a means of reducing this problem

TECHNOLOGY SUBJECTS SUPPORT SERVICE

DESIGN & COMMUNICATION GRAPHICS

Topic.....

NAME: _____ **DATE:** _____

Details of a torch assembly are given below, along with the parts list tabulated on the right. A 3D graphic of the parts is also shown. The bulb and switch are omitted for simplicity.

(a) Using a scale of 2:1, draw a sectional elevation A-A and a plan of the parts fully assembled.

(b) Balloon reference the parts in the orthographic views.

(c) A nylon chord, diameter 2mm, is to be used to secure the torch to the users wrist. Using a suitable freehand sketch modify the rear cap to show the method of attachment of the chord.

PART	NAME	NO. REQUIRED
1	Barrel	1
2	Front Cap	1
3	Rear Cap	1
4	Battery	2
5	Clear Lens	1
6	Reflector	1
7	Front seal	1
8	Battery Spring	1
9	Rear Seal	1

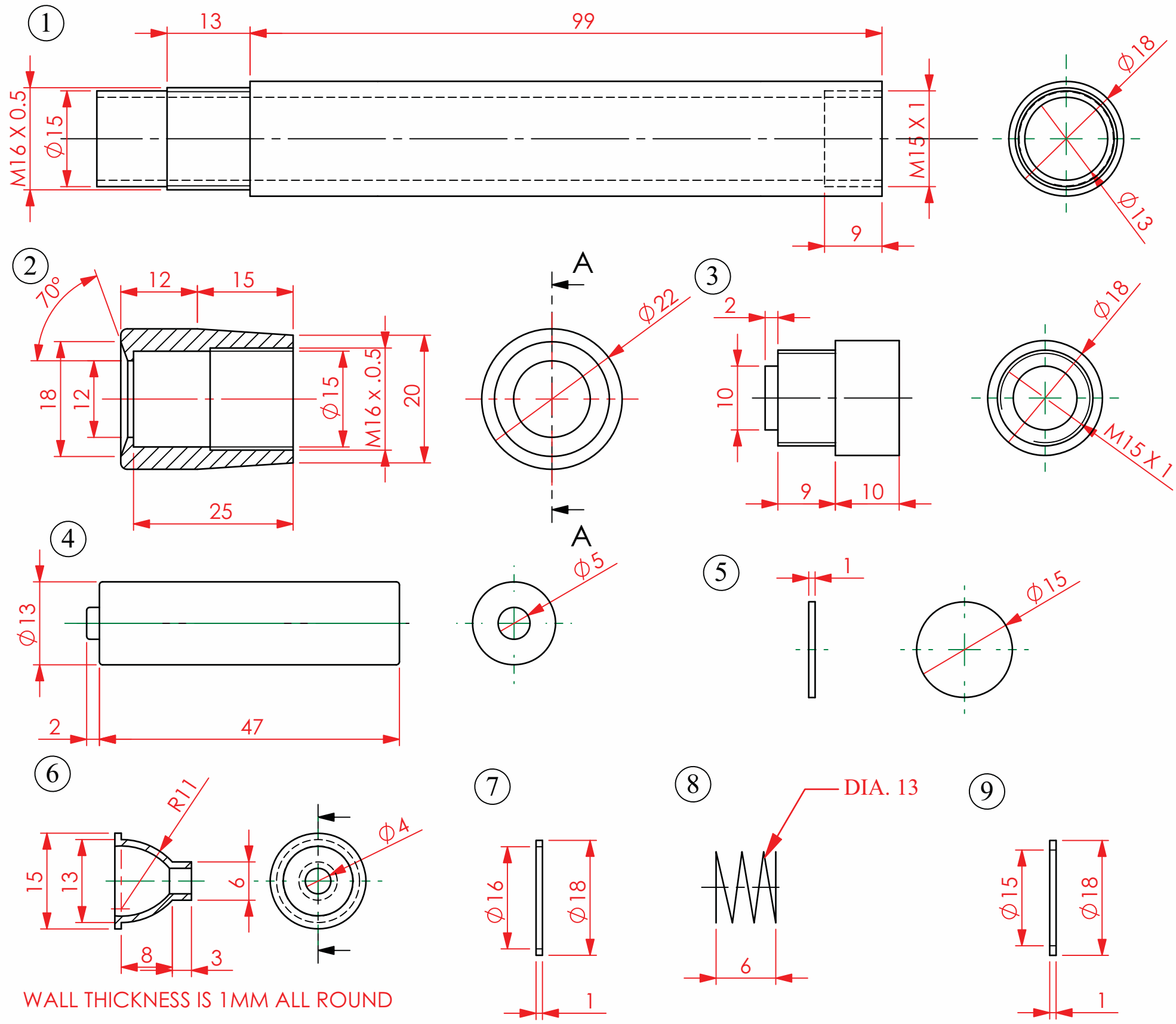

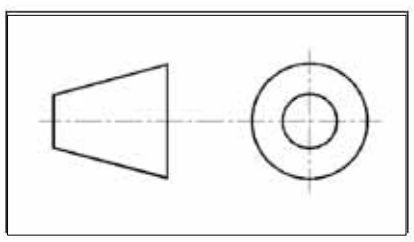

TECHNOLOGY SUBJECTS SUPPORT SERVICE

DESIGN & COMMUNICATION GRAPHICS

Topic.....

NAME: _____ **DATE:** _____

Details of a torch assembly are given below, along with the parts list tabulated on the right. A 3D graphic of the parts is also shown. The bulb and switch are omitted for simplicity.

(a) Using a scale of 2:1, draw a sectional elevation A-A and a plan of the parts fully assembled.

(b) Balloon reference the parts in the orthographic views.

(c) A nylon chord, diameter 2mm, is to be used to secure the torch to the users wrist. Using a suitable freehand sketch modify the rear cap to show the method of attachment of the chord.

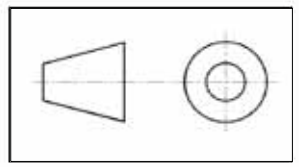

PART	NAME	NO. REQUIRED
1	Barrel	1
2	Front Cap	1
3	Rear Cap	1
4	Battery	2
5	Clear Lens	1
6	Reflector	1
7	Front seal	1
8	Battery Spring	1
9	Rear Seal	1

TECHNOLOGY SUBJECTS SUPPORT SERVICE

DESIGN & COMMUNICATION GRAPHICS

Topic.....

NAME: _____ **DATE:** _____

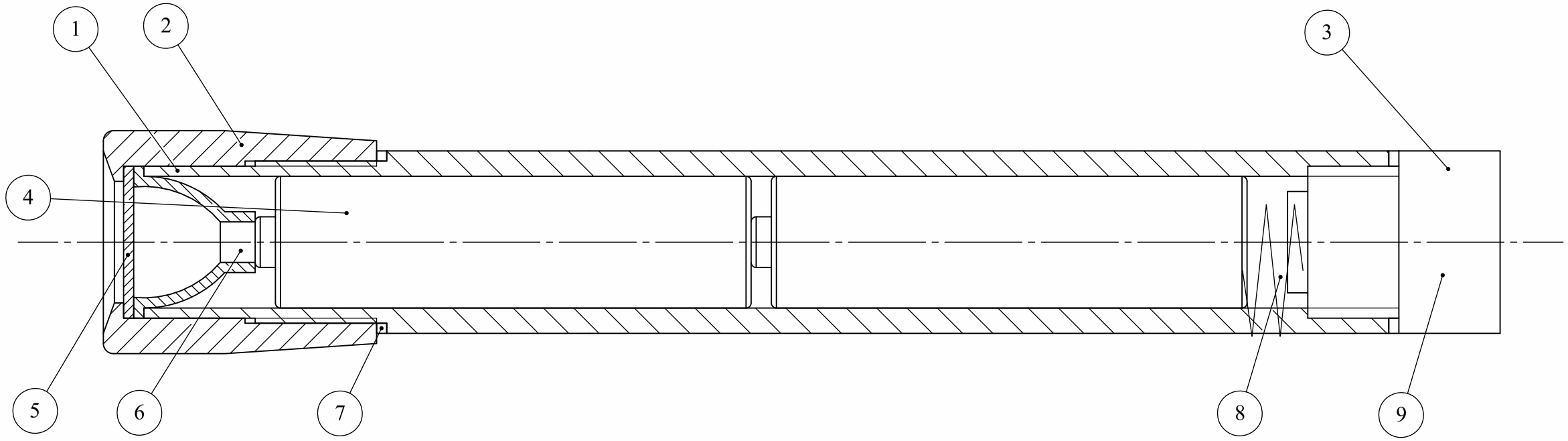

SECTION A-A

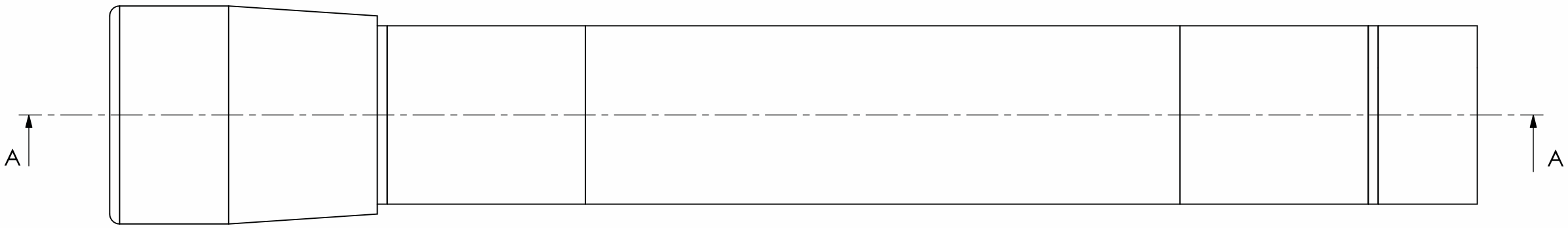

PLAN

PART	NAME	NO. REQUIRED
1	Barrel	1
2	Front Cap	1
3	Rear Cap	1
4	Battery	2
5	Clear Lens	1
6	Reflector	1
7	Front seal	1
8	Battery Spring	1
9	Rear Seal	1

Details of a torch assembly are given below, along with the parts list tabulated on the right. A 3D graphic of the parts is also shown. The bulb and switch are omitted for simplicity.

(a) Using a scale of 2:1, draw a sectional elevation A-A and a plan of the parts fully assembled.

(b) Balloon reference the parts in the orthographic views.

(c) A nylon chord, diameter 2mm, is to be used to secure the torch to the users wrist. Using a suitable freehand sketch modify the rear cap to show the method of attachment of the chord.

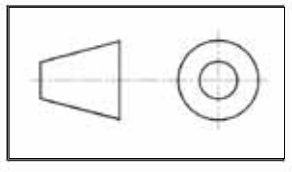

TECHNOLOGY SUBJECTS SUPPORT SERVICE

DESIGN & COMMUNICATION GRAPHICS

Topic.....

NAME: _____ **DATE:** _____

Details of a winch for raising and lowering a clothes line are given below along with the parts list. The crank handle has been omitted for simplicity.

A 3D graphic of the assembly is also shown.

(a) Draw the end elevation and project the sectional elevation C-C of the assembled winch.

(b) On the model shown, the winch needs to be locked in position by hand. On a seperate sheet, using a suitable freehand sketch, suggest a modification to the winch such that it will lock into position automatically and prevent the pulley from reversing.

PART	NAME	NO. REQUIRED
1	Bracket	1
2	Pulley	1
3	Shaft	1
4	M8 Nut	1
5	M8 Washer	1
6	M4 Screw	3
7	M4 Washer	1
8	Spacer	2
9	M4 Nut	1

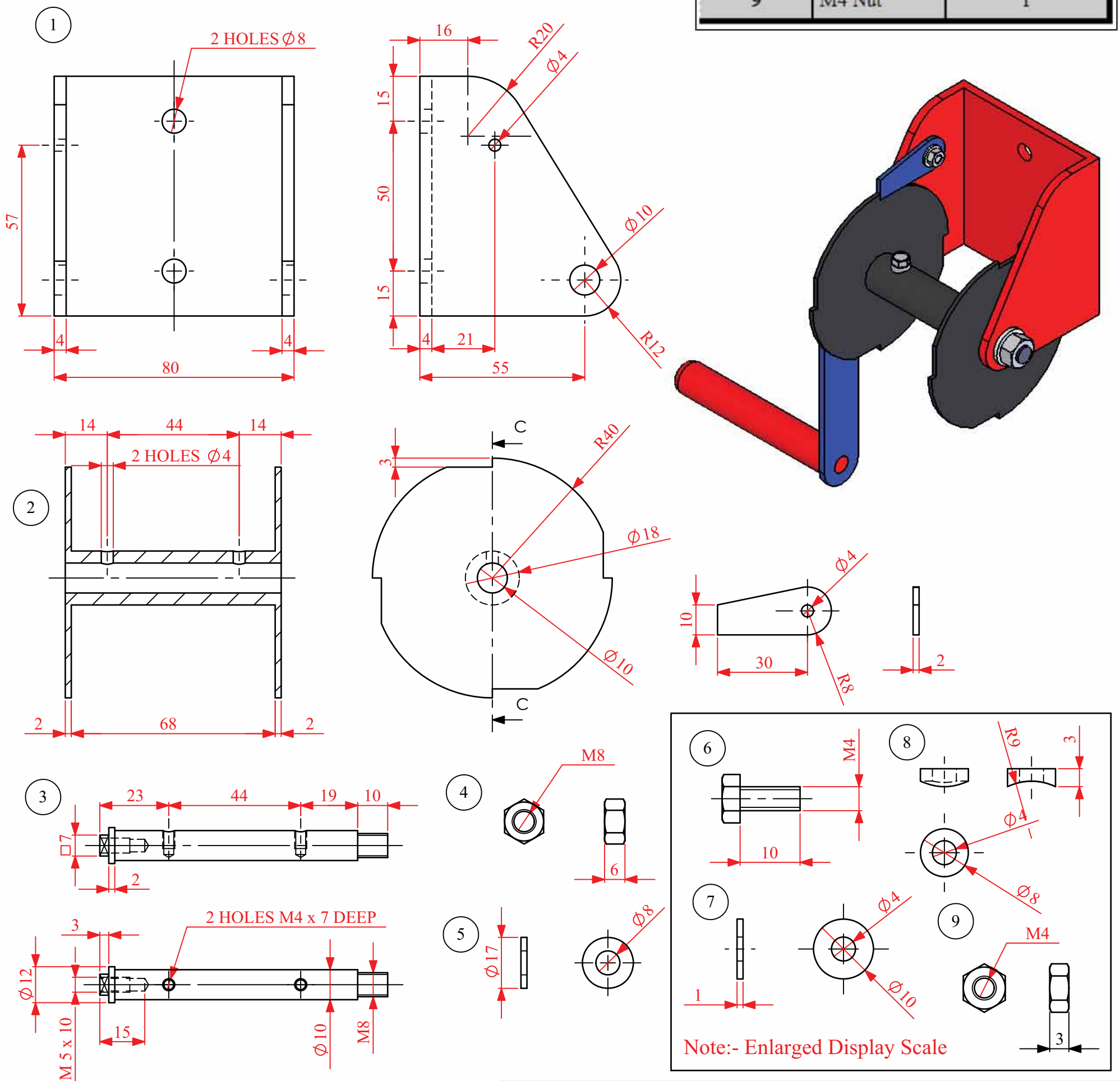

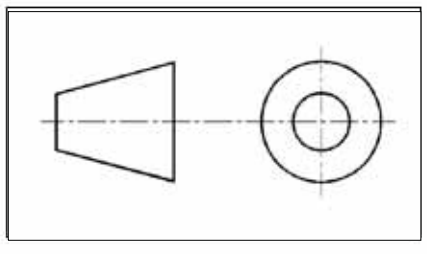

TECHNOLOGY SUBJECTS SUPPORT SERVICE

DESIGN & COMMUNICATION GRAPHICS

Topic.....

NAME: _____ **DATE:** _____

(a) Draw the end elevation and project the sectional elevation C-C of the assembled winch.

(b) On the model shown, the winch needs to be locked in position by hand. In the space provided, using a suitable freehand sketch, suggest a modification to the winch such that it will lock into position automatically and prevent the pulley from reversing.

PART	NAME	NO. REQUIRED
1	Bracket	1
2	Pulley	1
3	Shaft	1
4	M8 Nut	1
5	M8 Washer	1
6	M4 Screw	3
7	M4 Washer	1
8	Spacer	2
9	M4 Nut	1

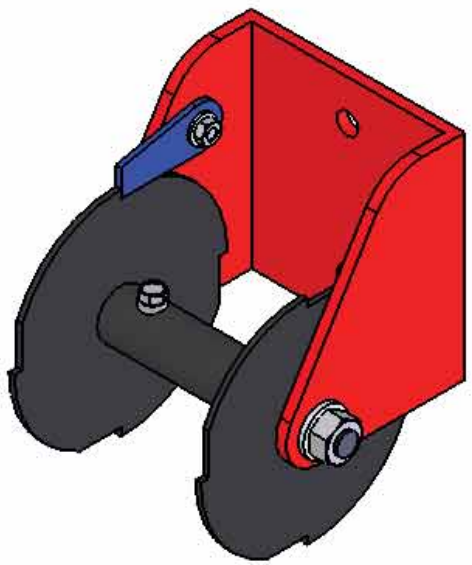

Key Points

Use of enlarged scale to show smaller parts in greater detail

Part section to show assembly detail of shaft/pulley/screws

Suggest a modification to the winch such that it will lock into position automatically and prevent the pulley from reversing.

TECHNOLOGY SUBJECTS SUPPORT SERVICE

DESIGN & COMMUNICATION GRAPHICS

Topic.....

NAME: _____ **DATE:** _____

(a) Draw the end elevation and project the sectional elevation C-C of the assembled winch.

(b) On the model shown, the winch needs to be locked in position by hand. In the space provided, using a suitable freehand sketch, suggest a modification to the winch such that it will lock into position automatically and prevent the pulley from reversing.

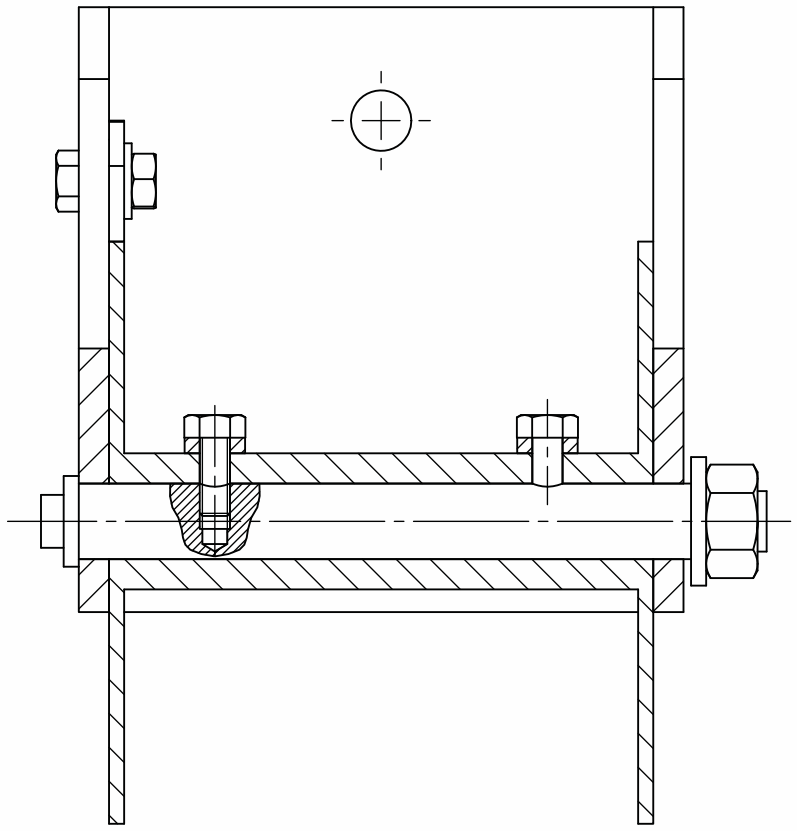

SECTION A-A

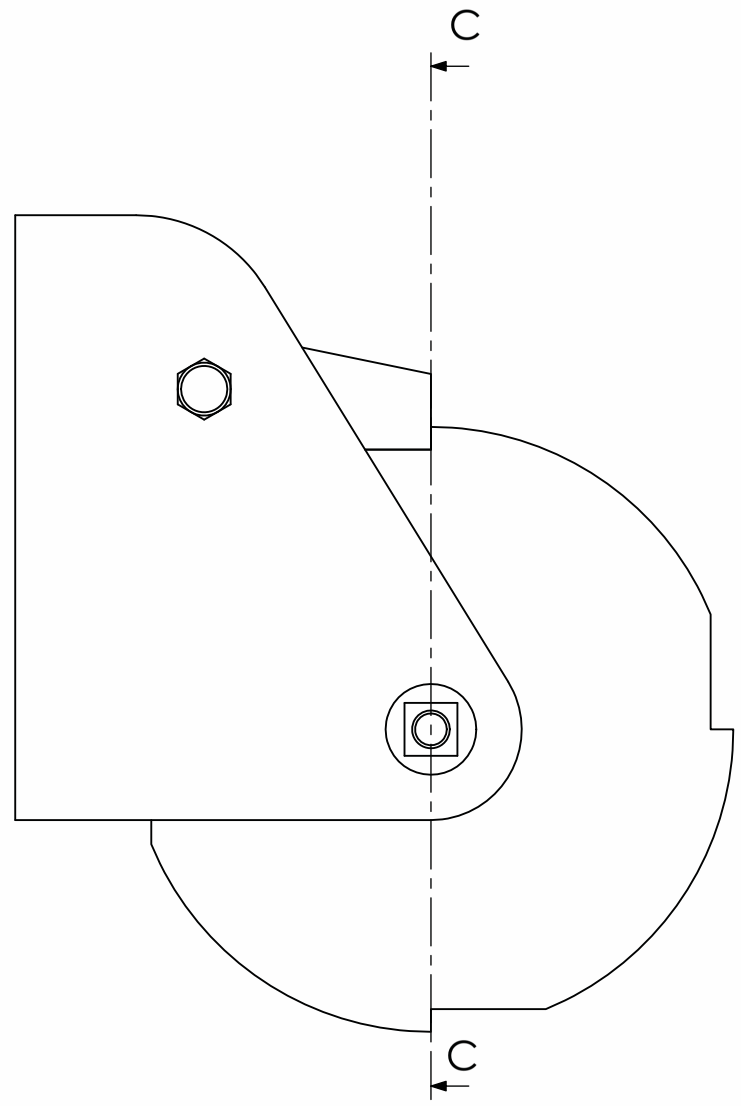

END ELEVATION

PART	NAME	NO. REQUIRED
1	Bracket	1
2	Pulley	1
3	Shaft	1
4	M8 Nut	1
5	M8 Washer	1
6	M4 Screw	3
7	M4 Washer	1
8	Spacer	2
9	M4 Nut	1

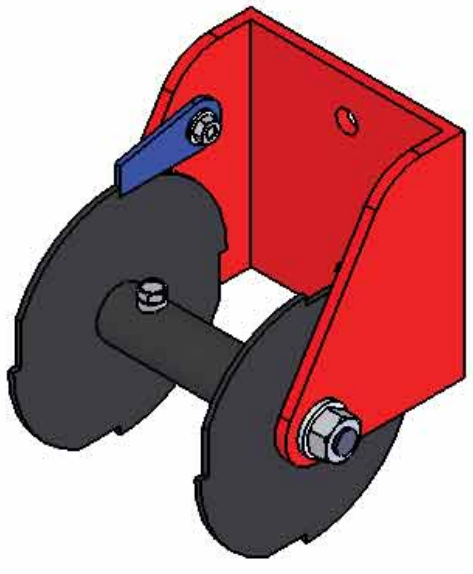

Key Points

Use of enlarged scale to show smaller parts in greater detail

Part section to show assembly detail of shaft/pulley/screws

Suggest a modification to the winch such that it will lock into position automatically and prevent the pulley from reversing.

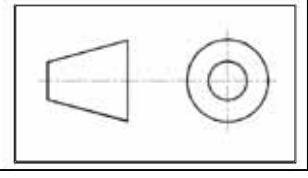

TECHNOLOGY SUBJECTS SUPPORT SERVICE

DESIGN & COMMUNICATION GRAPHICS

Topic.....

NAME: _____ **DATE:** _____

Details of a night light holder and night light are given along with a parts list. A photograph of the assembled light is also given.

(a) On the accompanying sheet, draw full size, the plan and sectional elevation A-A of the assembled light.

(b) Add 5 main dimensions to the orthographic views.

(c) Denote the use of first angle projection using the appropriate symbol.

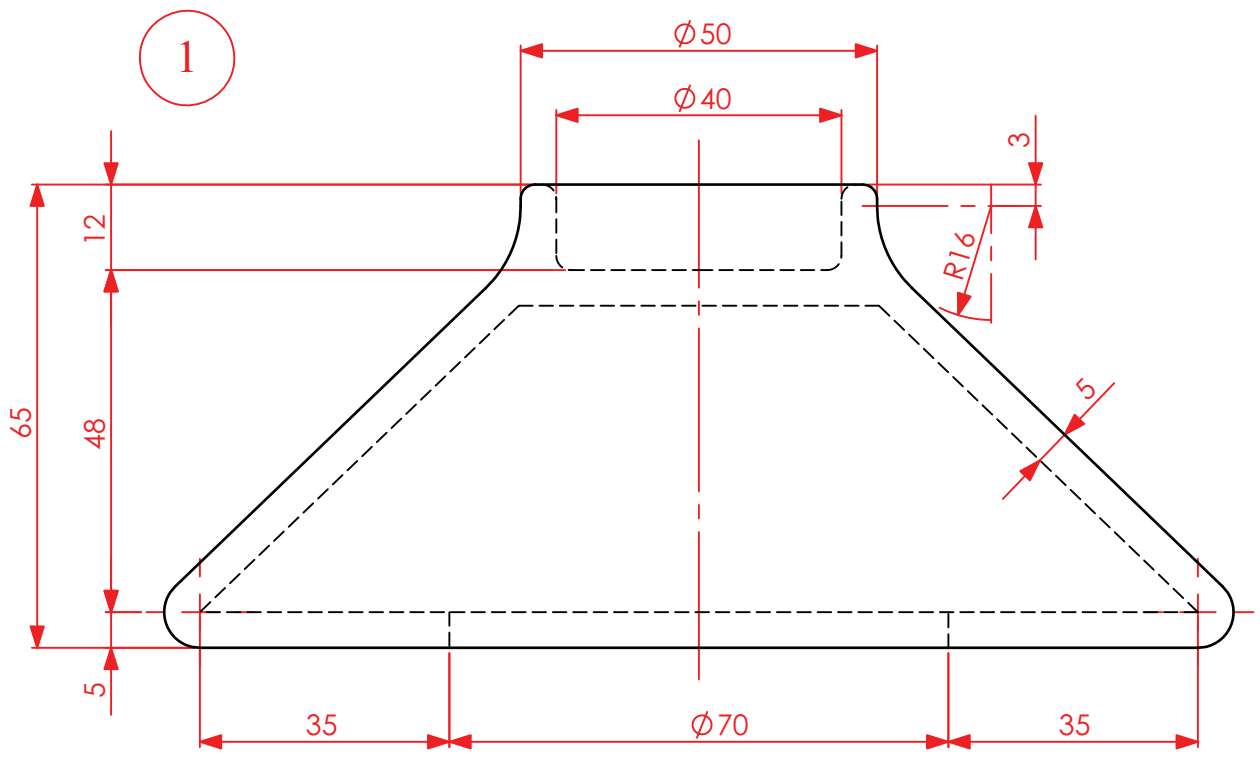

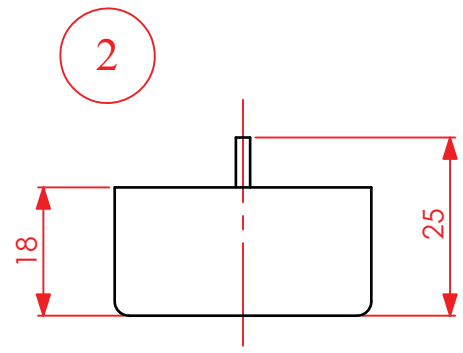

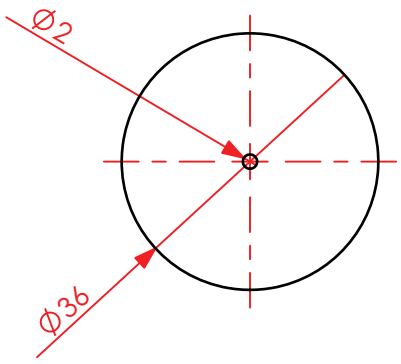

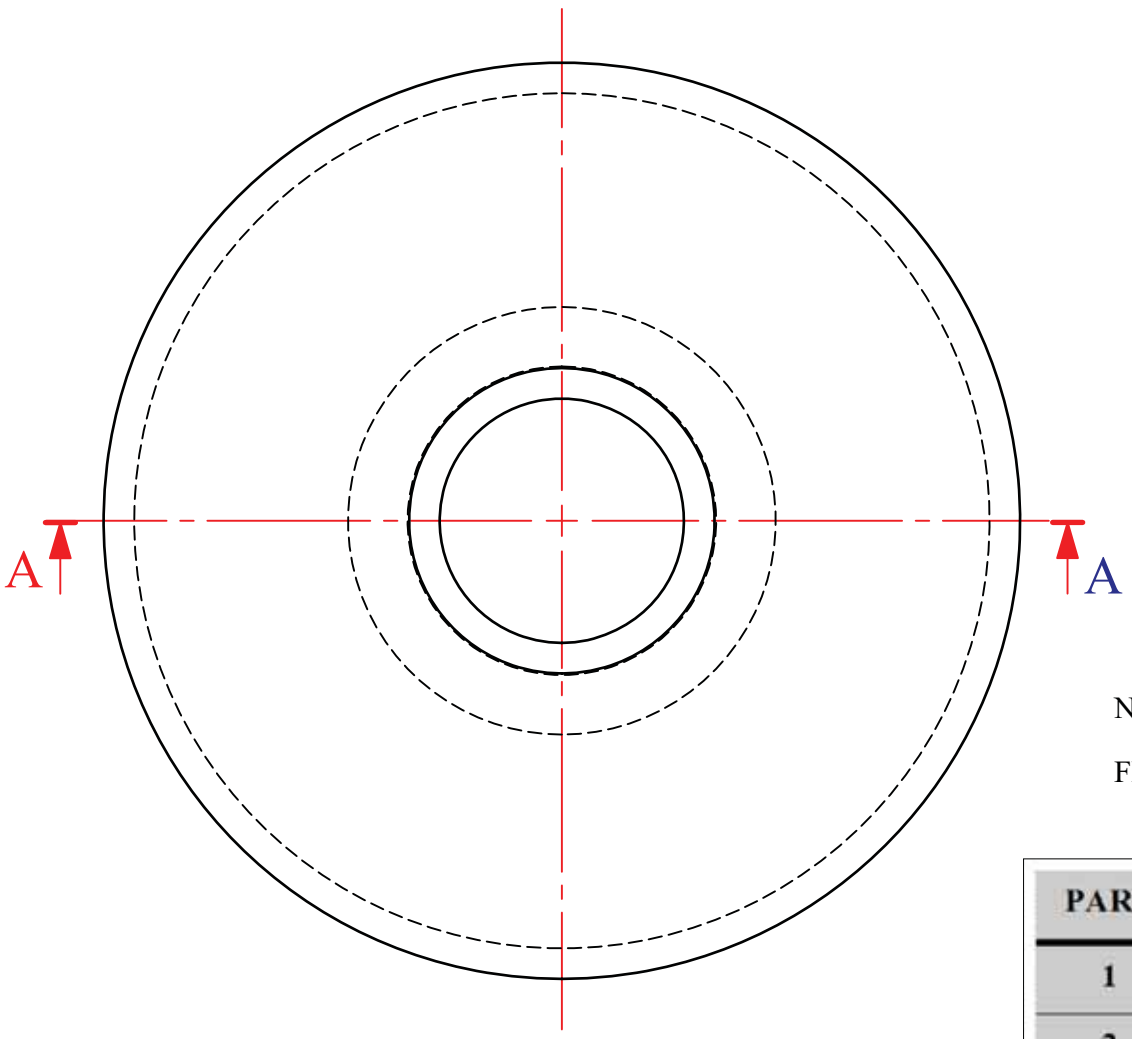

NOTE: WALL THICKNESS IS 5MM ALL ROUND

FILLETS = 2MM UNLESS OTHERWISE STATED

PART	NAME	NO. REQUIRED
1	Night Light Holder	1
2	Night Light	1

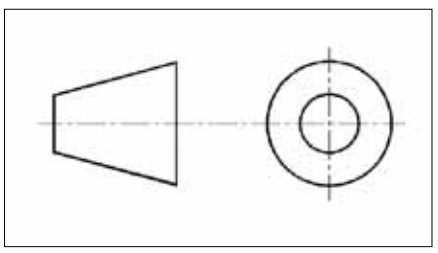

TECHNOLOGY SUBJECTS SUPPORT SERVICE

DESIGN & COMMUNICATION GRAPHICS

Topic.....

NAME: _____ **DATE:** _____

Details of a night light holder and night light are given along with a parts list. A photograph of the assembled light is also given.

(a) On the accompanying sheet, draw full size, the plan and sectional elevation A-A of the assembled light.

(b) Add 5 main dimensions to the orthographic views.

(c) Denote the use of first angle projection using the appropriate symbol.

Key Points

Sectioning of hollow base. Sectioning exemptions.
Application of fillets
Inserting dimensions - ISO Conventions BS 308
ISO Projection Symbol
Concept of a sectional elevation.
Insertion of view titles

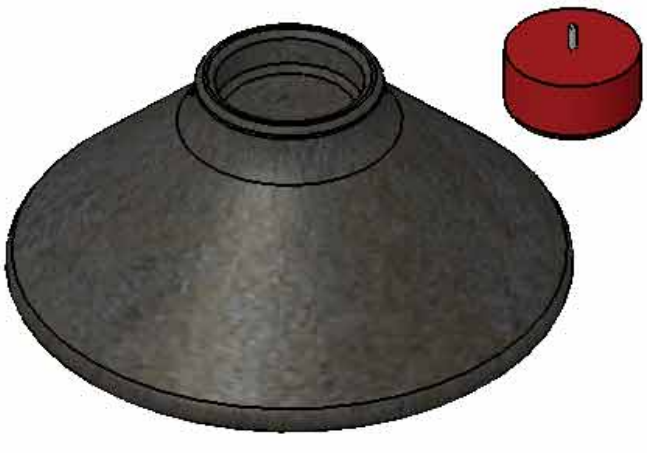

PART	NAME	NO. REQUIRED
1	Night Light Holder	1
2	Night Light	1

TECHNOLOGY SUBJECTS SUPPORT SERVICE

DESIGN & COMMUNICATION GRAPHICS

Topic.....

NAME: _____ **DATE:** _____

Details of a night light holder and night light are given along with a parts list. A photograph of the assembled light is also given.

(a) On the accompanying sheet, draw full size, the plan and sectional elevation A-A of the assembled light.

(b) Add 5 main dimensions to the orthographic views.

(c) Denote the use of first angle projection using the appropriate symbol.

Key Points

Sectioning of hollow base. Sectioning exemptions.
Application of fillets
Inserting dimensions - ISO Conventions BS 308
ISO Projection Symbol
Concept of a sectional elevation.
Insertion of view titles

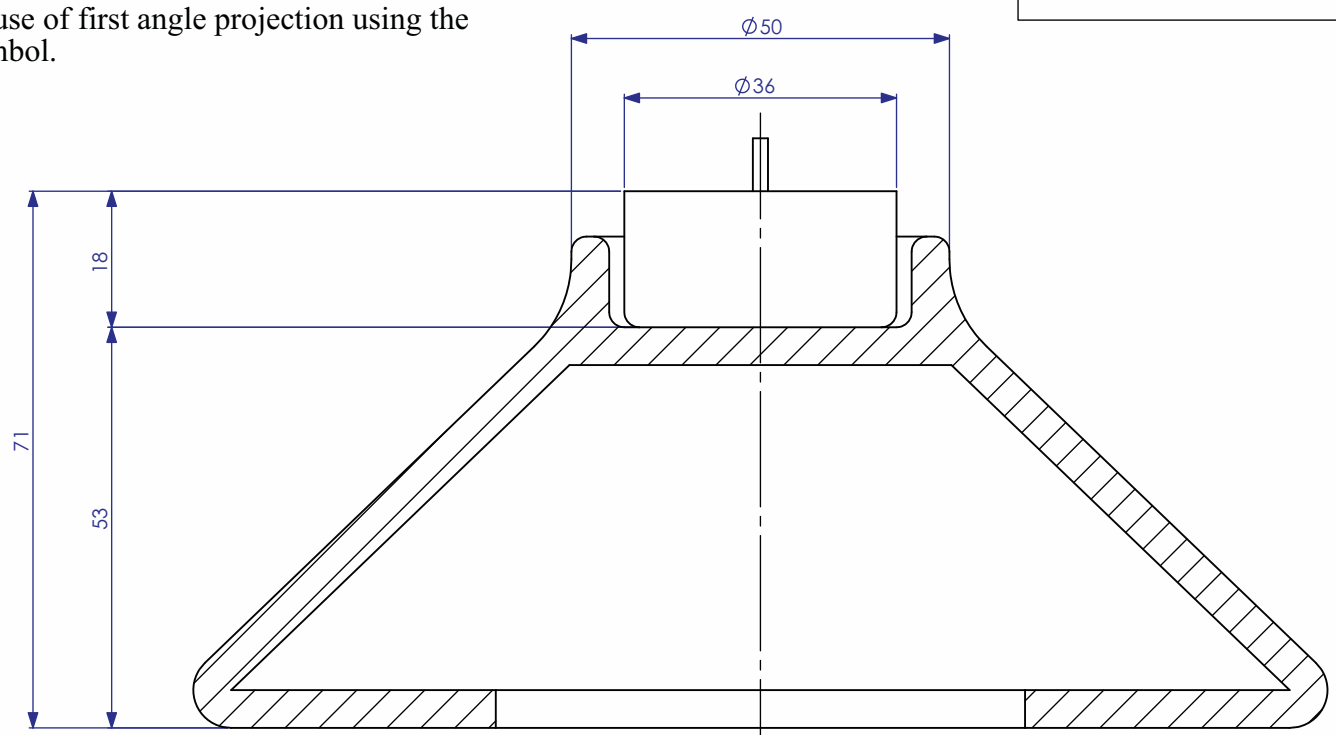

SECTION A-A

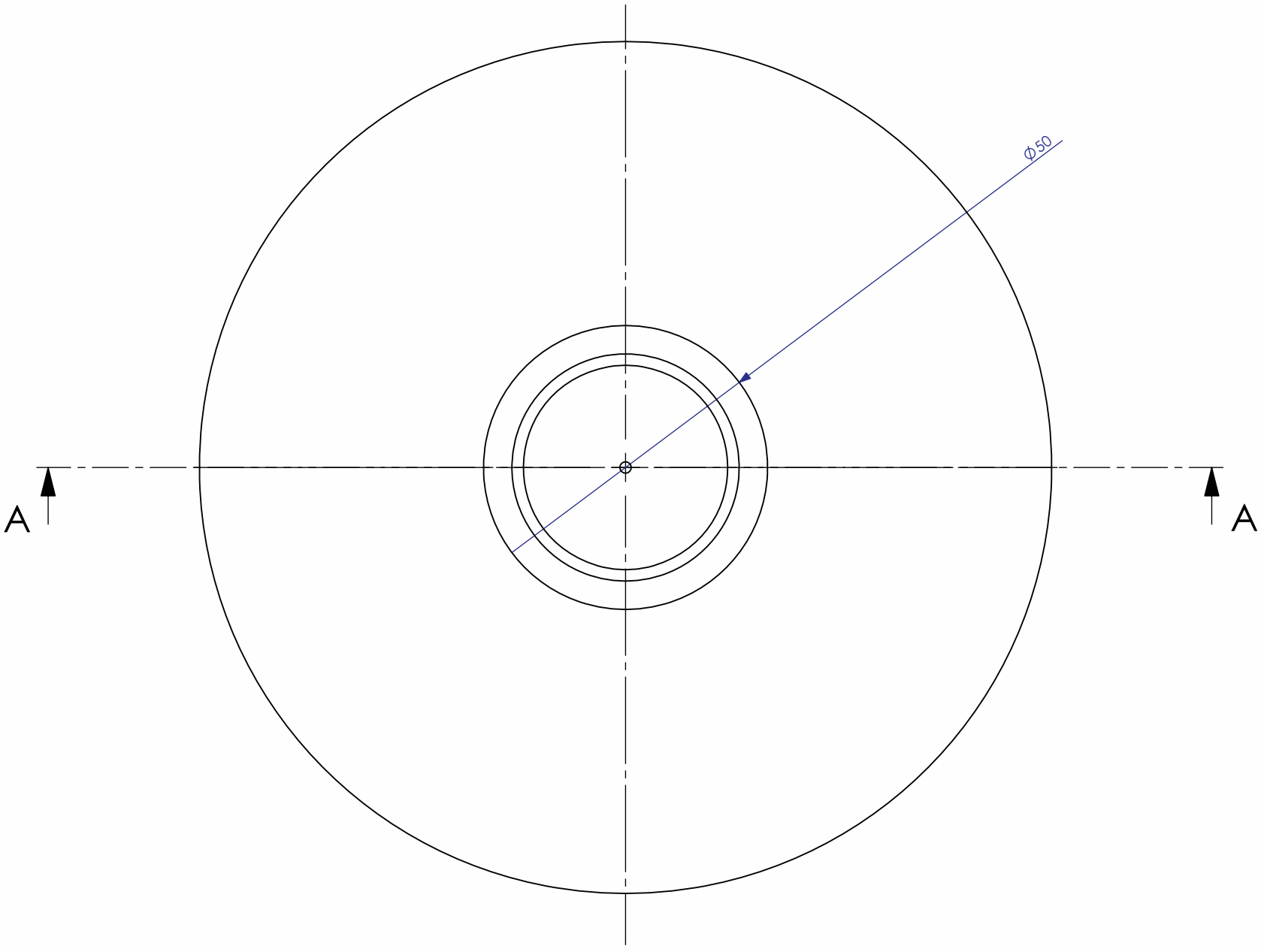

PLAN

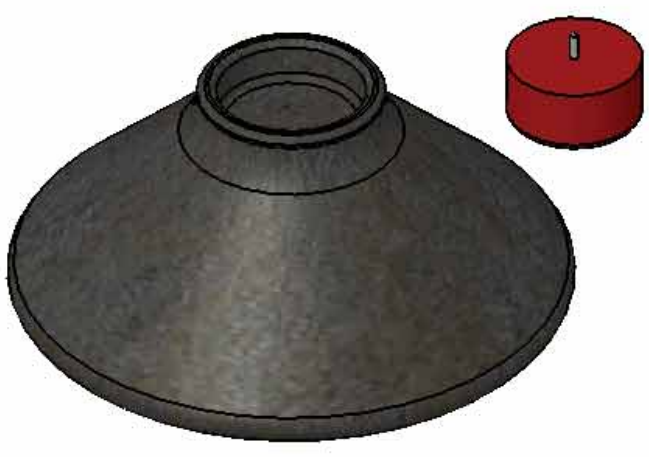

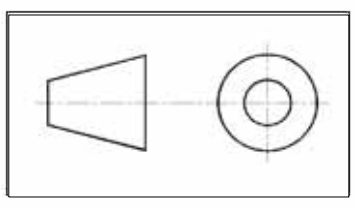

PART	NAME	NO. REQUIRED
1	Night Light Holder	1
2	Night Light	1

TECHNOLOGY SUBJECTS SUPPORT SERVICE

DESIGN & COMMUNICATION GRAPHICS

Topic.....

NAME: _____ **DATE:** _____

Details of a Toilet Roll Holder are given below along with the parts list. A 3D graphic of the assembly, with the cutting plane, is also shown.

(a) Draw, using a scale of 1:1, the elevation, end elevation and project the sectional plan A-A of the assembled toilet roll holder. Include hidden detail in the elevation and end elevation

(b) Using a suitable freehand sketch, suggest a modification to the holder to allow the roll to be replaced when used.

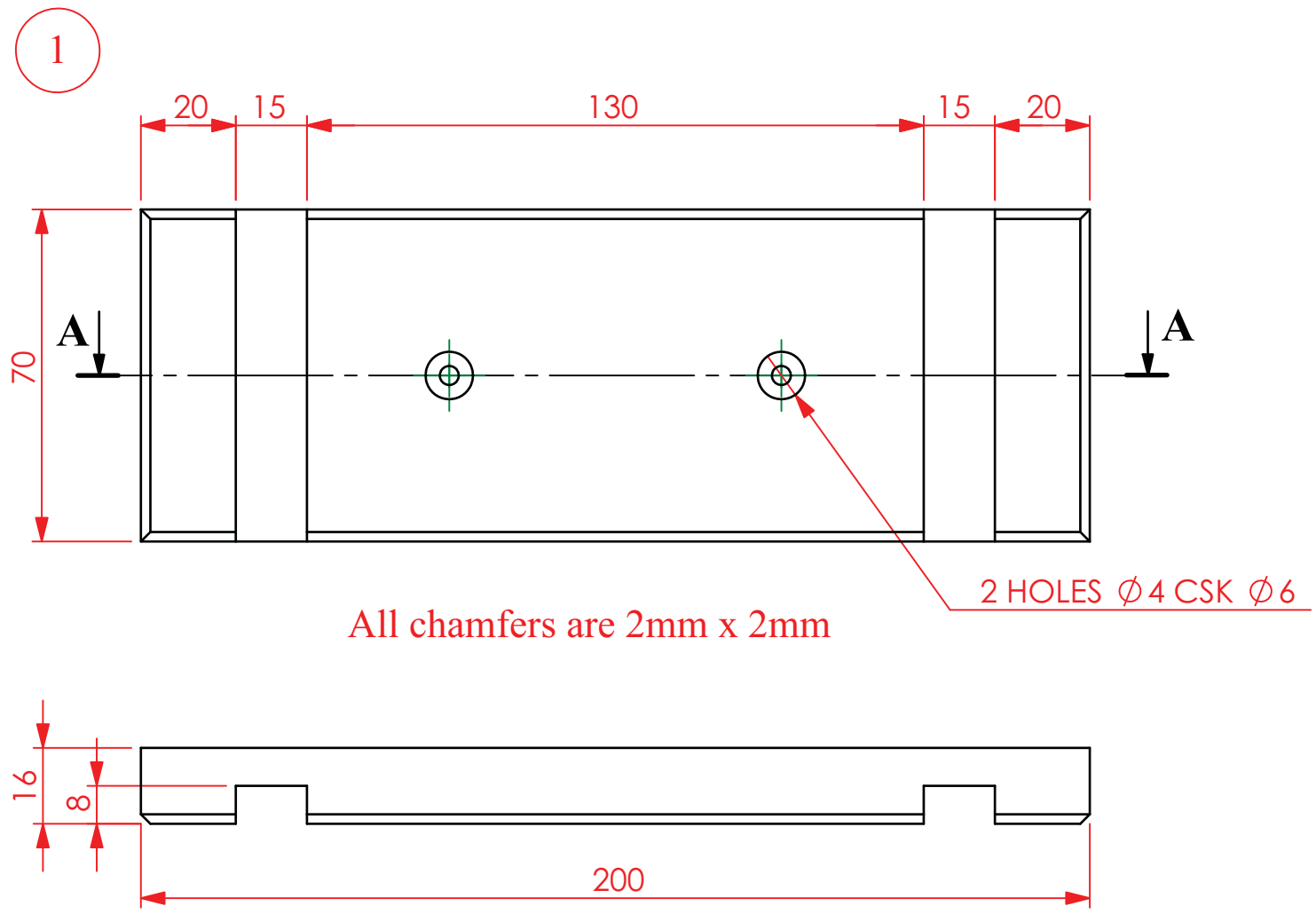

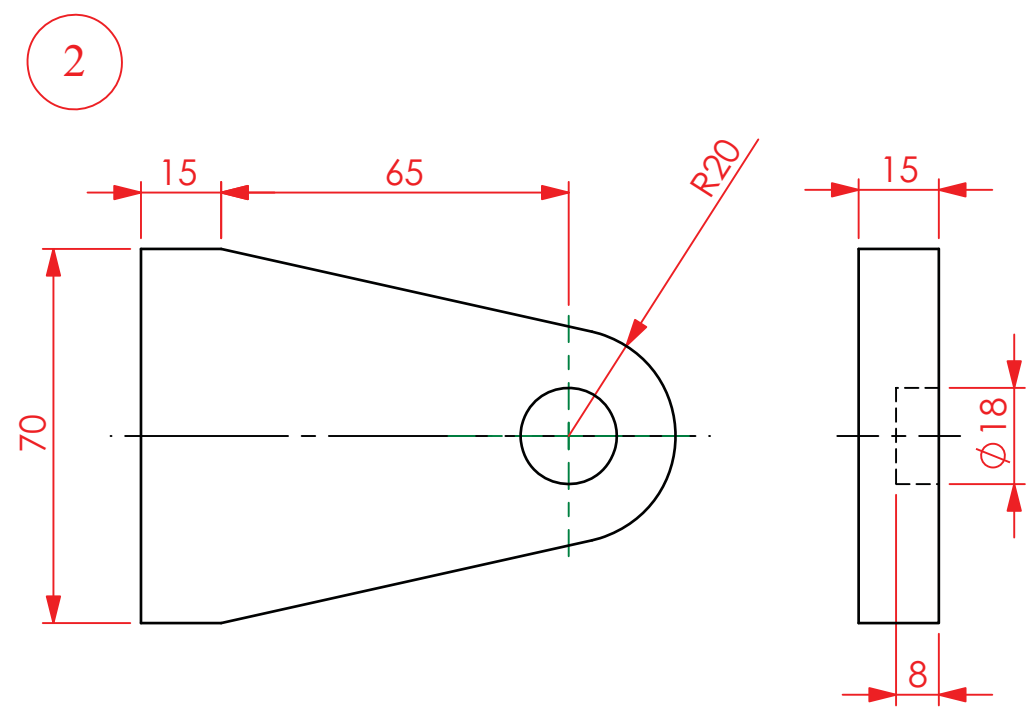

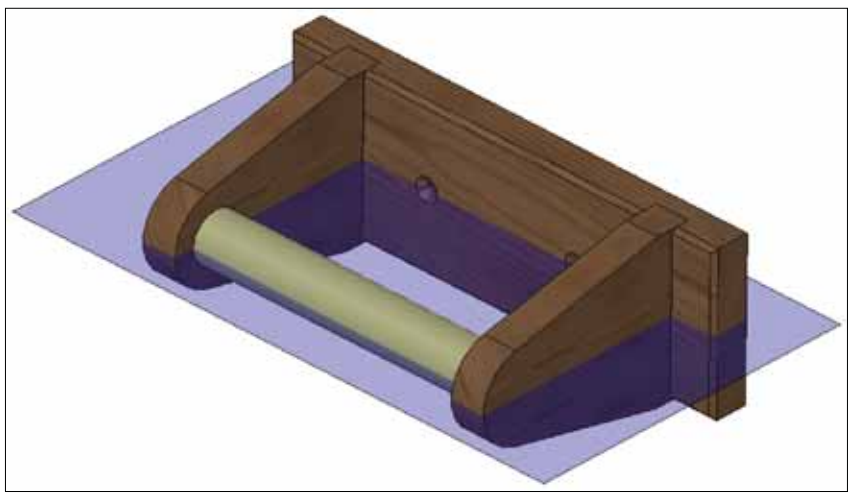

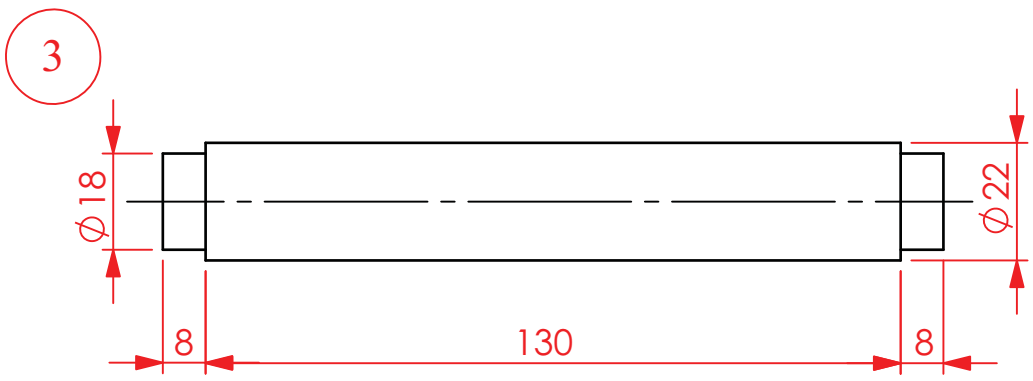

PART	NAME	NO. REQUIRED
1	Back Plate	1
2	Support	2
3	Barrel	1

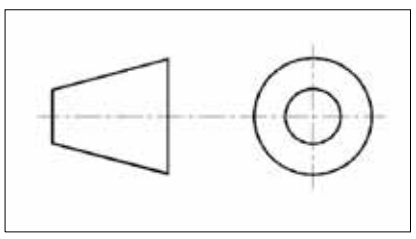

TECHNOLOGY SUBJECTS SUPPORT SERVICE

DESIGN & COMMUNICATION GRAPHICS

Topic.....

NAME: _____ **DATE:** _____

Details of a Toilet Roll Holder are given along with the parts list. A 3D graphic of the assembly is also shown.

(a) Draw the elevation, end elevation and project the sectional plan A-A of the assembled toilet roll holder. Include hidden detail in the elevation and end elevation

(b) Using a suitable freehand sketch, suggest a modification to the holder to allow the roll to be replaced when used.

Key Points

'Concept of a Sectional Plan'
Adjacent surfaces, when cut, are hatched in opposite directions
Larger surfaces - wider hatch spacing. Smaller surfaces - narrower hatch spacing
Hidden detail not shown behind hatch surface
Use of freehand sketching - design modification.

PART	NAME	NO. REQUIRED
1	Back Plate	1
2	Support	2
3	Barrel	1

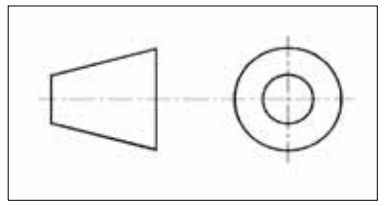

TECHNOLOGY SUBJECTS SUPPORT SERVICE

DESIGN & COMMUNICATION GRAPHICS

Topic.....

NAME: _____ **DATE:** _____

Details of a Toilet Roll Holder are given along with the parts list. A 3D graphic of the assembly is also shown.

(a) Draw the elevation, end elevation and project the sectional plan A-A of the assembled toilet roll holder. Include hidden detail in the elevation and end elevation

(b) Using a suitable freehand sketch, suggest a modification to the holder to allow the roll to be replaced when used.

Key Points

'Concept of a Sectional Plan'
Adjacent surfaces, when cut, are hatched in opposite directions
Larger surfaces - wider hatch spacing. Smaller surfaces - narrower hatch spacing
Hidden detail not shown behind hatch surface
Use of freehand sketching - design modification.

PART	NAME	NO. REQUIRED
1	Back Plate	1
2	Support	2
3	Barrel	1

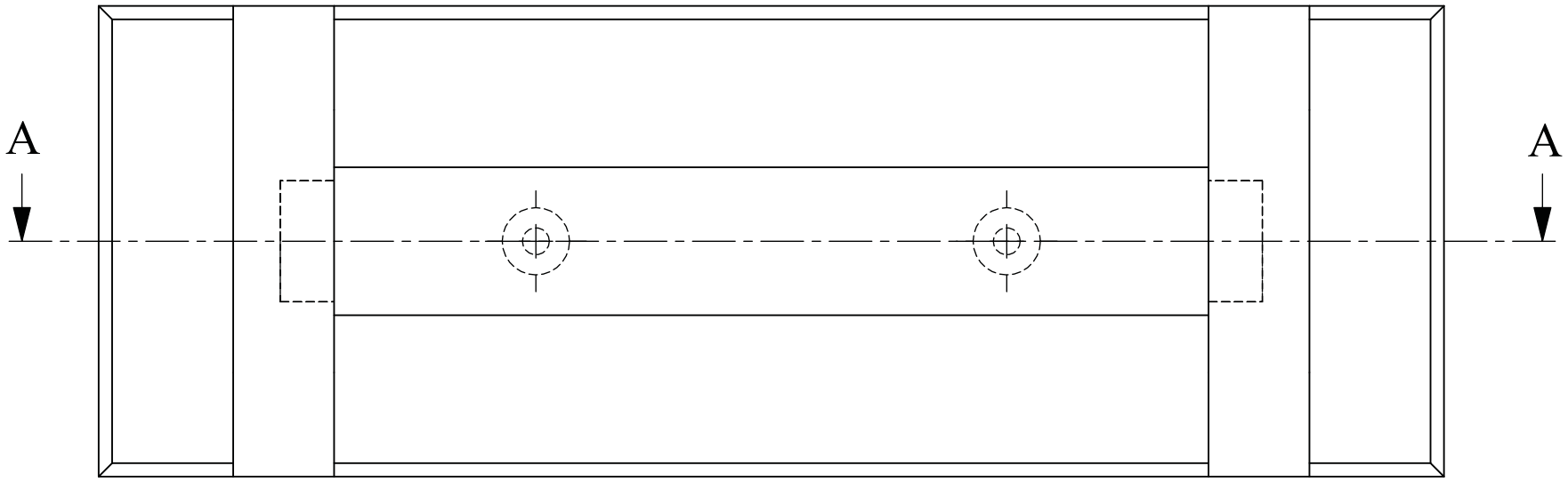

ELEVATION

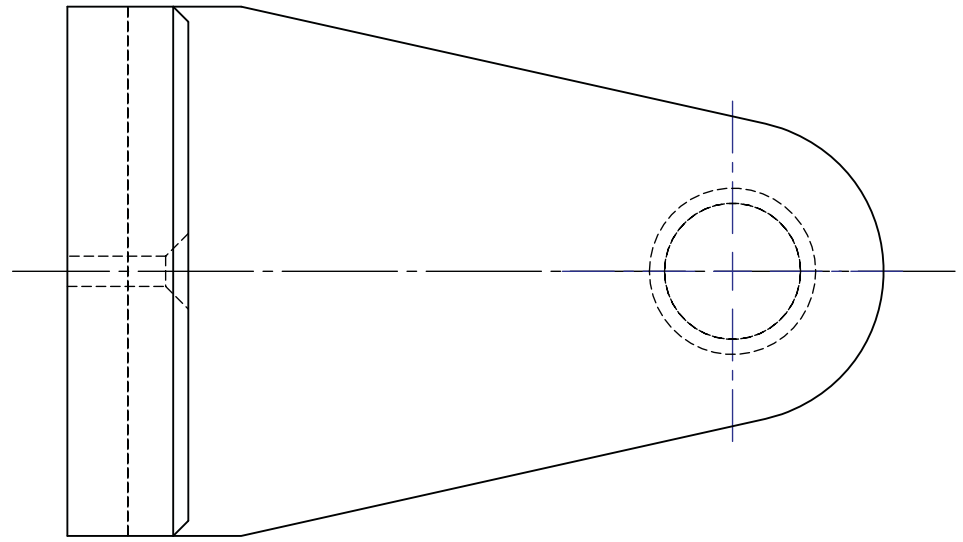

END ELEVATION

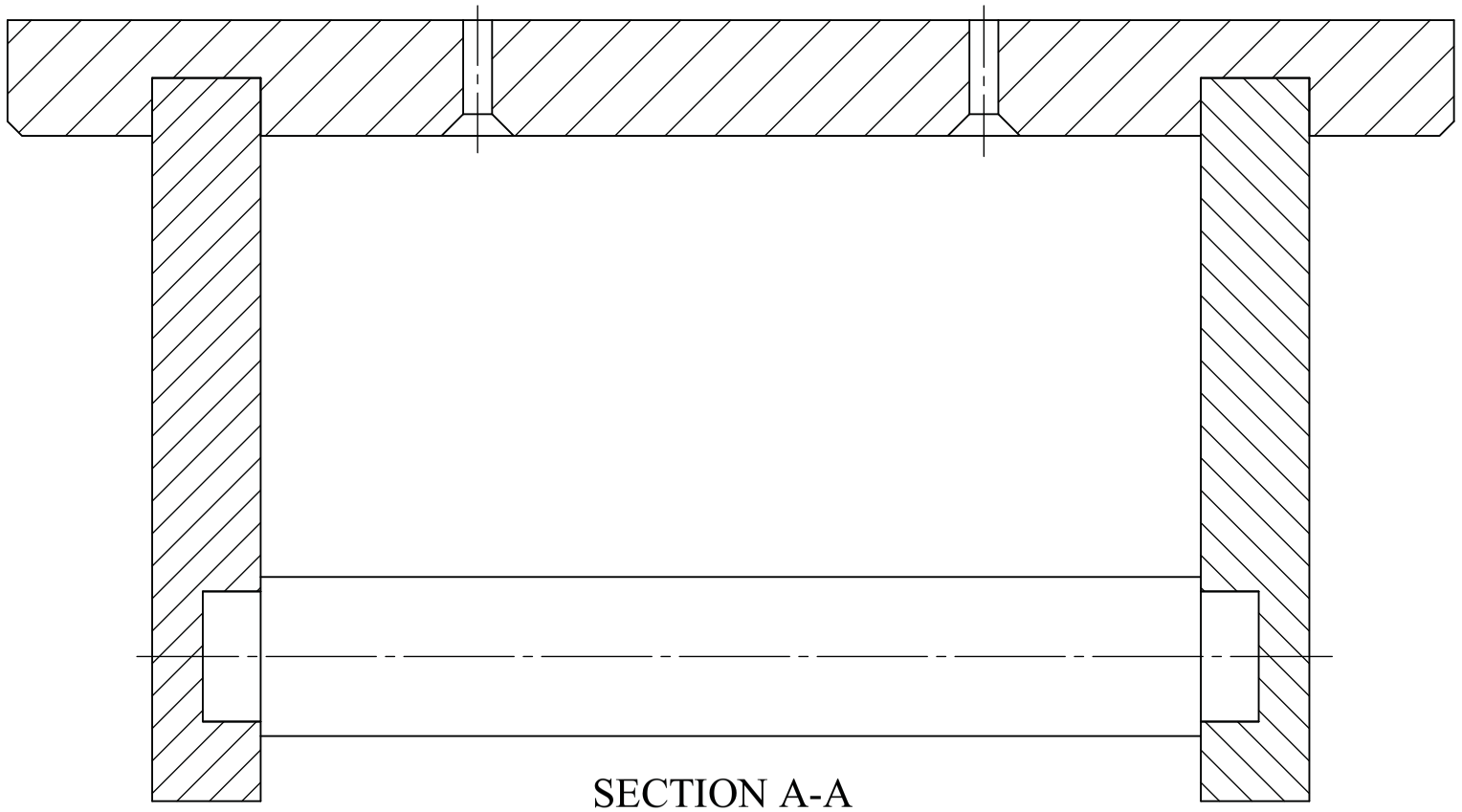

SECTION A-A
SCALE 1 : 1

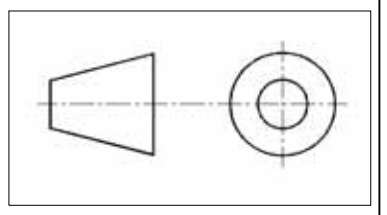

TECHNOLOGY SUBJECTS SUPPORT SERVICE

DESIGN & COMMUNICATION GRAPHICS

Topic.....

NAME: _____ **DATE:** _____

Details of a model aeroplane are given below along with the parts list. A 3D graphic of the assembly is also shown. The nose of the aeroplane is based on an ellipse.

(a) Using a scale of 1:1, draw the sectional elevation A-A of the assembled parts.

(b) Add 5 main dimensions to the view

(c) Make a neat freehand exploded sketch of the tail assembly

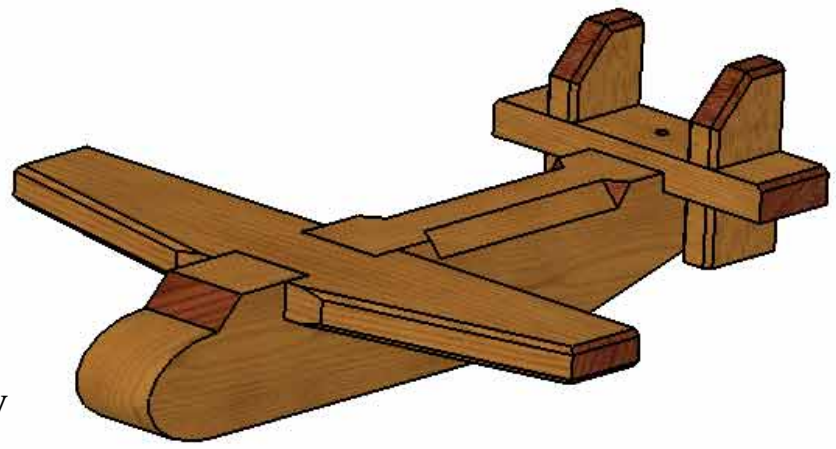

NOTE: ALL CHAMFERS ARE 2MM x 2MM UNLESS OTHERWISE STATED

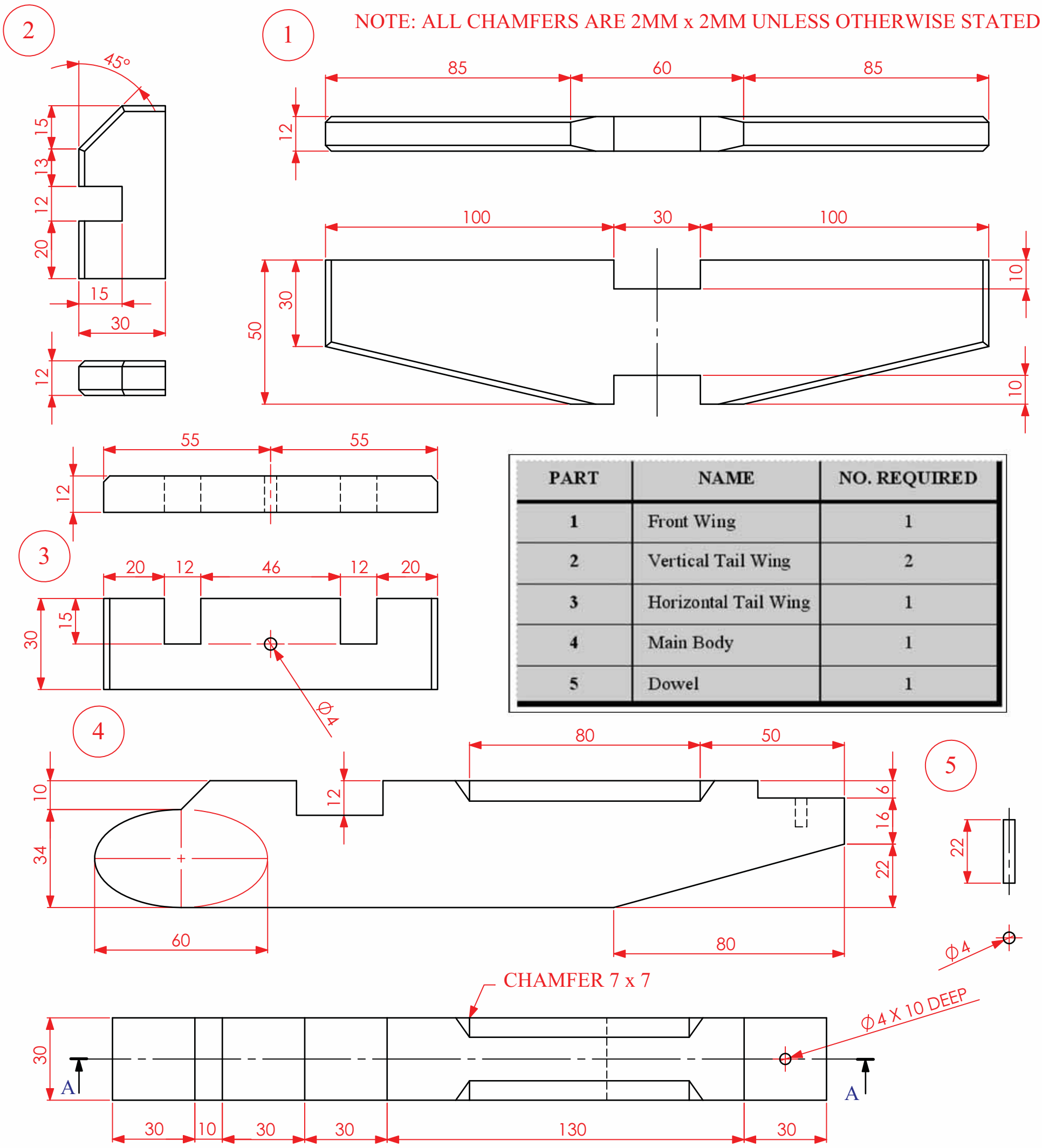

PART	NAME	NO. REQUIRED
1	Front Wing	1
2	Vertical Tail Wing	2
3	Horizontal Tail Wing	1
4	Main Body	1
5	Dowel	1

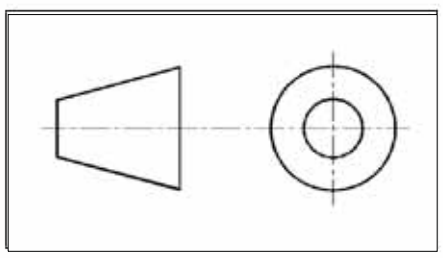

TECHNOLOGY SUBJECTS SUPPORT SERVICE

DESIGN & COMMUNICATION GRAPHICS

Topic.....

NAME: _____ **DATE:** _____

Details of a model aeroplane are given below along with the parts list. A 3D graphic of the assembly is also shown. The nose of the aeroplane is based on an ellipse.

(a) Using a scale of 1:1, draw the sectional elevation A-A of the assembled parts.

(b) Add 5 main dimensions to the view

(c) Make a neat freehand exploded sketch of the tail assembly

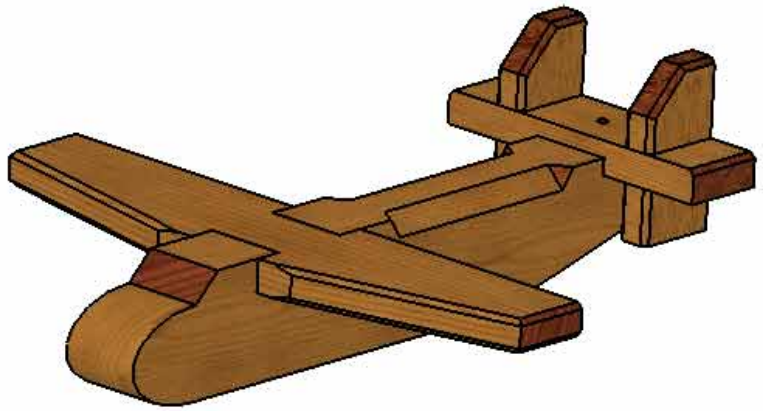

Key Points

Ellipse construction method for the nose of the main body.

Surfaces not cut by section plane or positioned behind the section plane are represented as normal.

Sectioning exceptions.

Freehand sketching - exploded view.

PART	NAME	NO. REQUIRED
1	Front Wing	1
2	Vertical Tail Wing	2
3	Horizontal Tail Wing	1
4	Main Body	1
5	Dowel	1

TECHNOLOGY SUBJECTS SUPPORT SERVICE

DESIGN & COMMUNICATION GRAPHICS

Topic.....

NAME: _____ **DATE:** _____

Details of a model aeroplane are given below along with the parts list. A 3D graphic of the assembly is also shown. The nose of the aeroplane is based on an ellipse.

(a) Using a scale of 1:1, draw the sectional elevation A-A of the assembled parts.

(b) Add 5 main dimensions to theview

(c) Make a neat freehand exploded sketch of the tail assembly

Key Points

Ellipse construction method for the nose of the main body.

Surfaces not cut by section plane or positioned behind the section plane are represented as normal.

Sectioning exemptions.

Freehand sketching - exploded view.

PART	NAME	NO. REQUIRED
1	Front Wing	1
2	Vertical Tail Wing	2
3	Horizontal Tail Wing	1
4	Main Body	1
5	Dowel	1

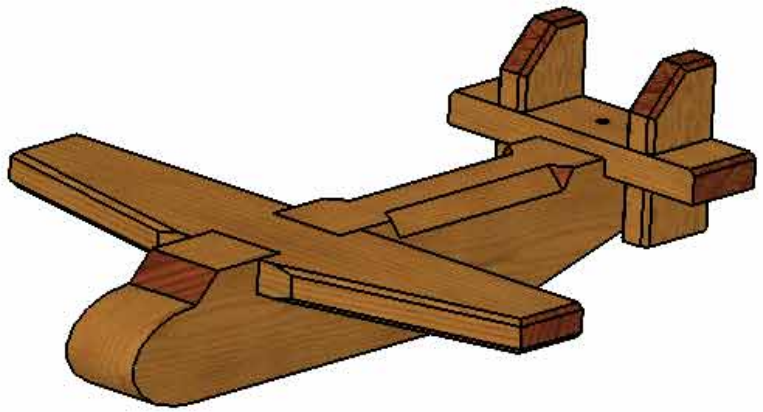

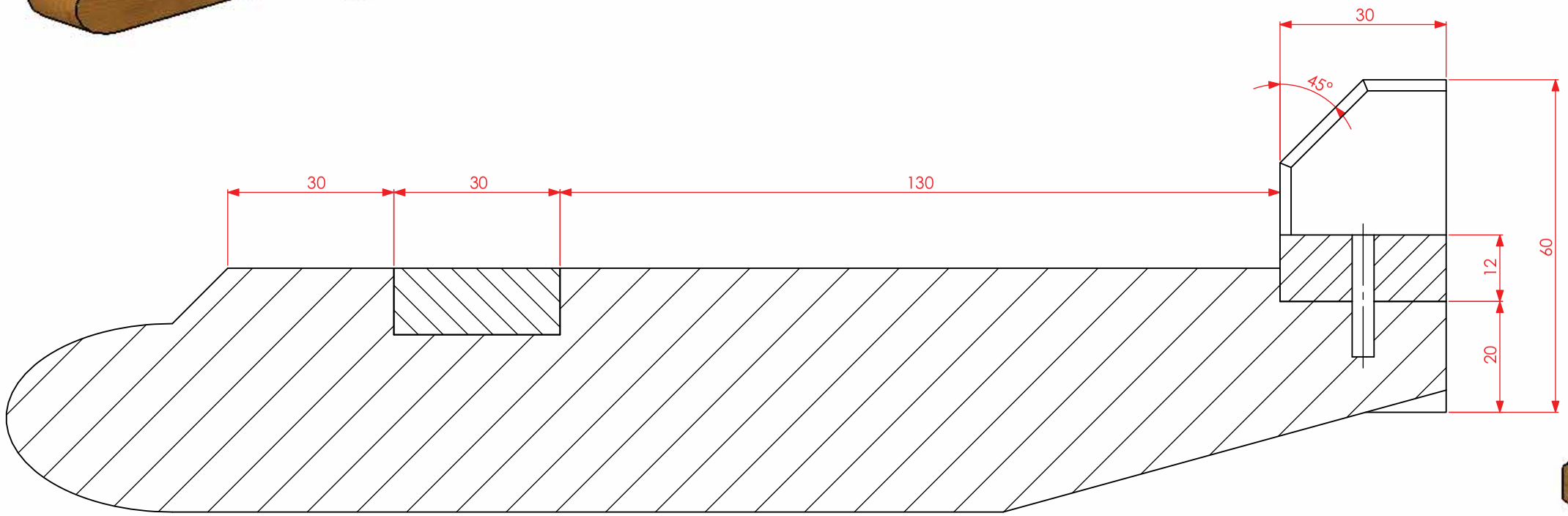

SECTION A-A
SCALE 1 : 1

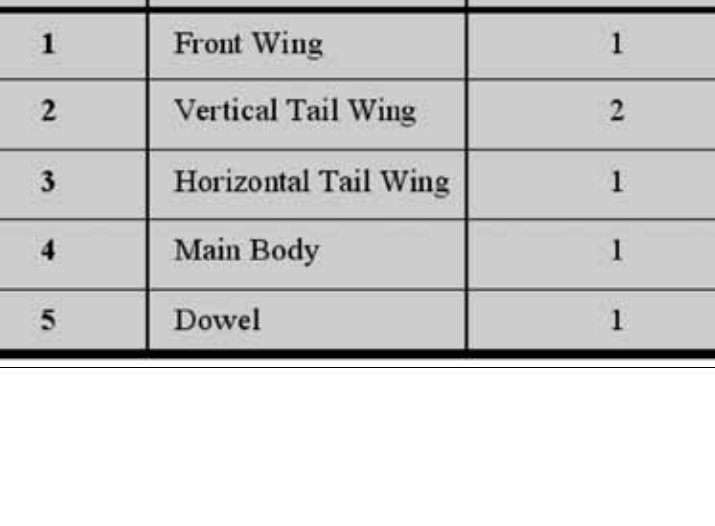

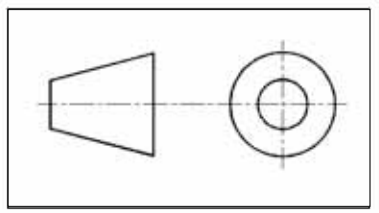

TECHNOLOGY SUBJECTS SUPPORT SERVICE

DESIGN & COMMUNICATION GRAPHICS

Topic.....

NAME: _____ **DATE:** _____

Details of a sellotape dispenser assembly are given below with the parts list tabulated on the bottom left. A 3D graphic of the assembly is also given.

(a) On the accompanying sheet, using a scale of 1:1, draw the plan and project a sectional elevation A-A of the assembled sellotape holder. Hidden detail may be ommitted.

(b) Add balloon referencing to identify the parts in the orthographic views.

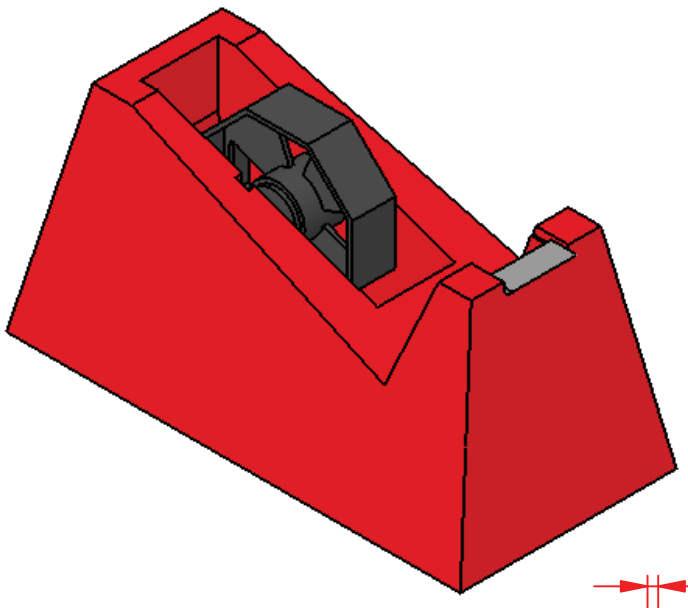

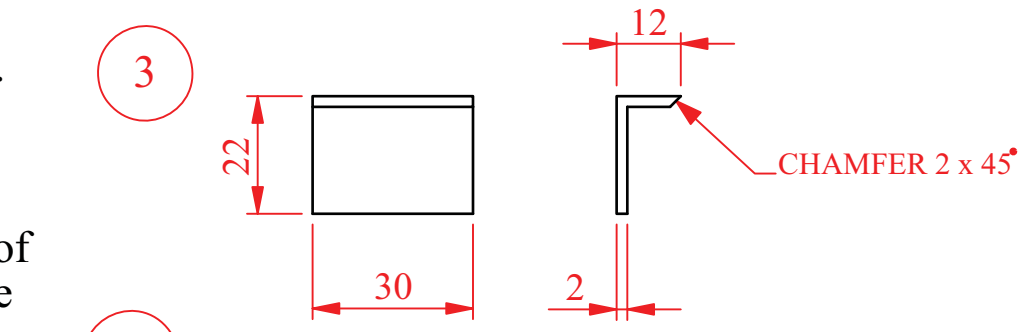

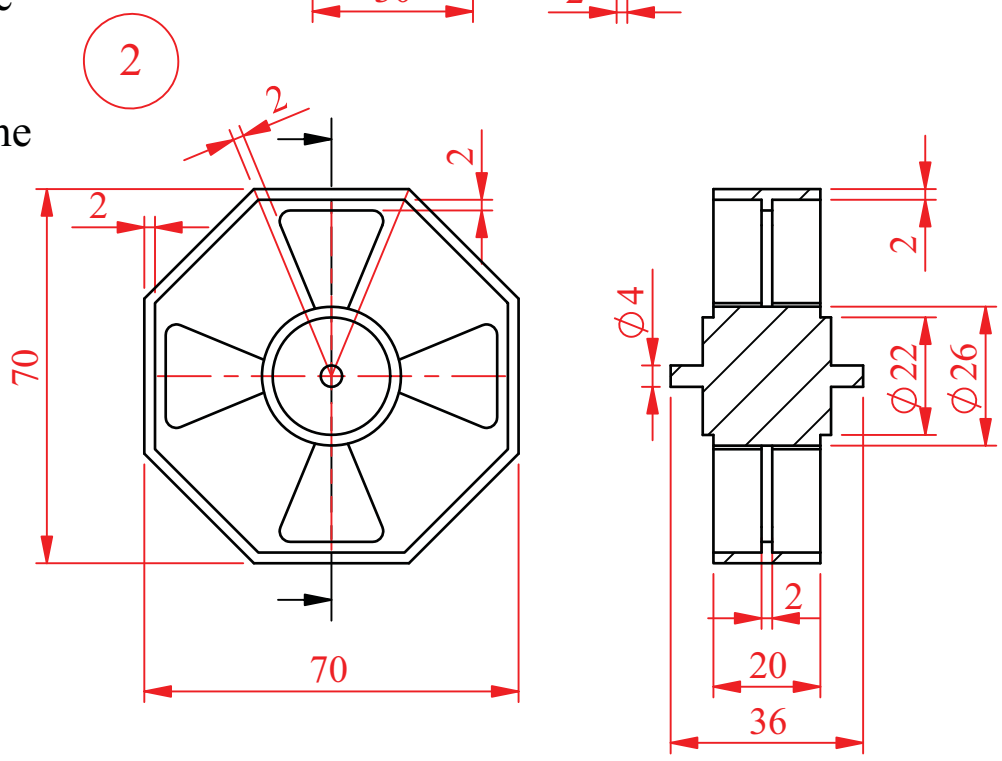

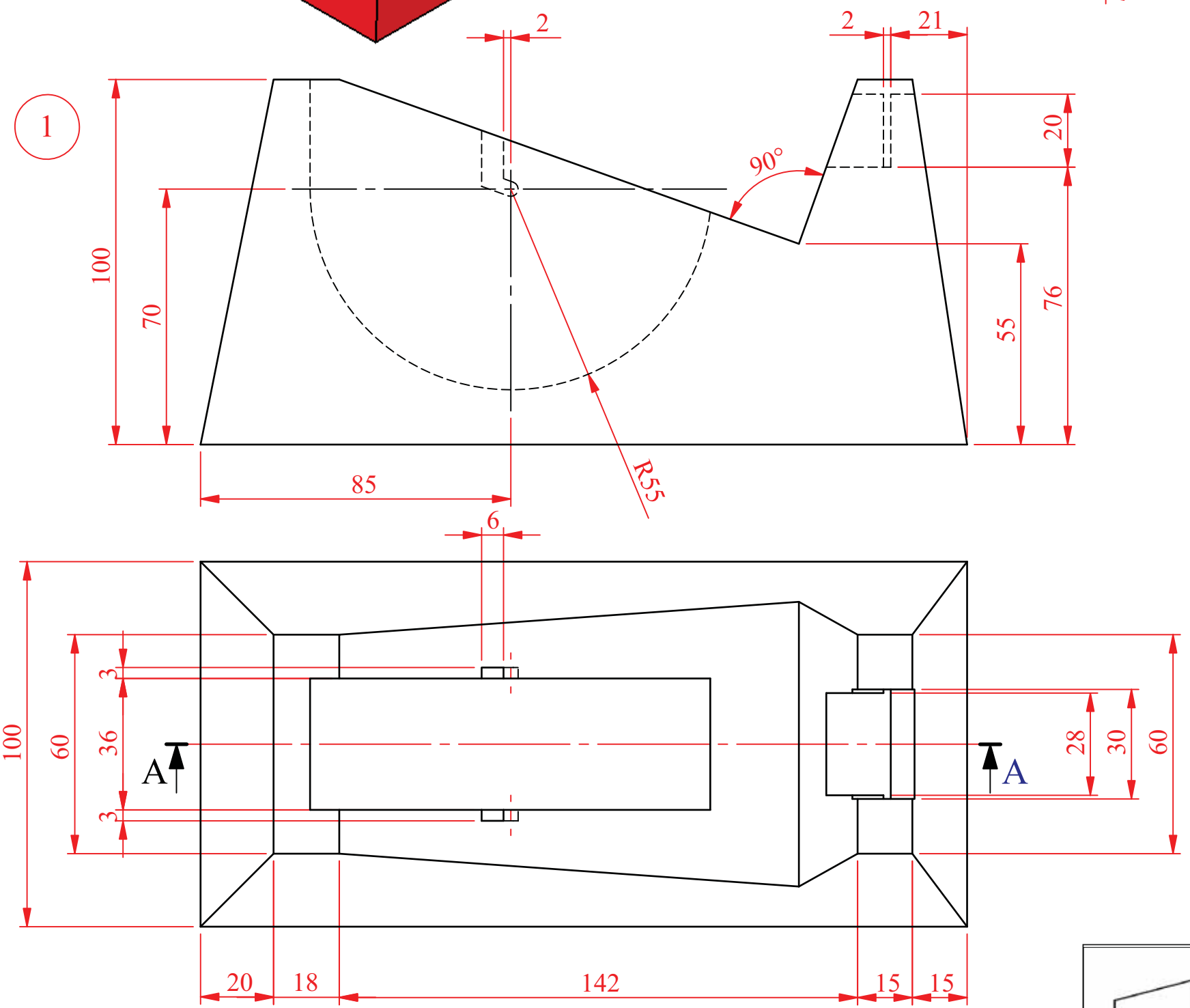

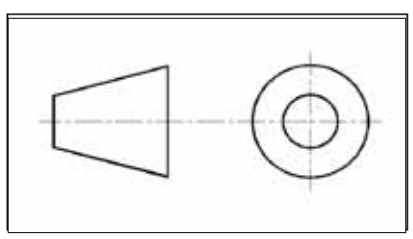

PART	NAME	NO. REQUIRED
1	Body	1
2	Insert	1
3	Blade	1

TECHNOLOGY SUBJECTS SUPPORT SERVICE

DESIGN & COMMUNICATION GRAPHICS

Topic.....

NAME: _____ **DATE:** _____

Details of a sellotape dispenser assembly are given on the accompanying sheet with the parts list tabulated below.
A 3D graphic of the assembly is also shown below.

(a) In the space provided, using a scale of 1:1, draw the plan and project a sectional elevation A-A of the assembled sellotape holder. Hidden detail may be ommitted.

(b) Add balloon referencing to identify the parts in the orthographic views

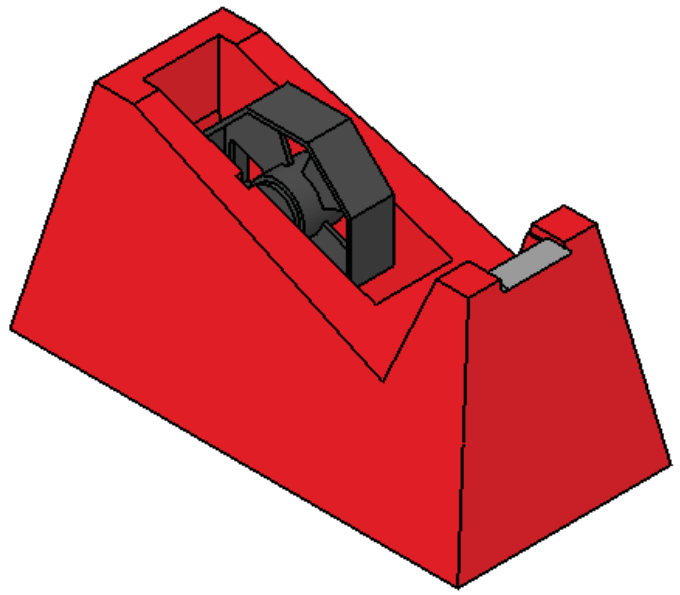

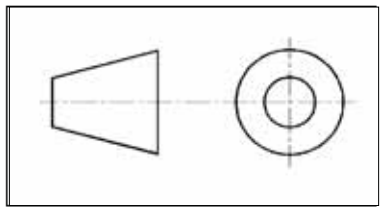

PART	NAME	NO. REQUIRED
1	Body	1
2	Insert	1
3	Blade	1

TECHNOLOGY SUBJECTS SUPPORT SERVICE

DESIGN & COMMUNICATION GRAPHICS

Topic.....

NAME: _____ **DATE:** _____

Details of a sellotape dispenser assembly are given on the accompanying sheet with the parts list tabulated below.
A 3D graphic of the assembly is also shown below.

(a) In the space provided, using a scale of 1:1, draw the plan and project a sectional elevation A-A of the assembled sellotape holder. Hidden detail may be ommitted.

(b) Add balloon referencing to identify the parts in the orthographic views

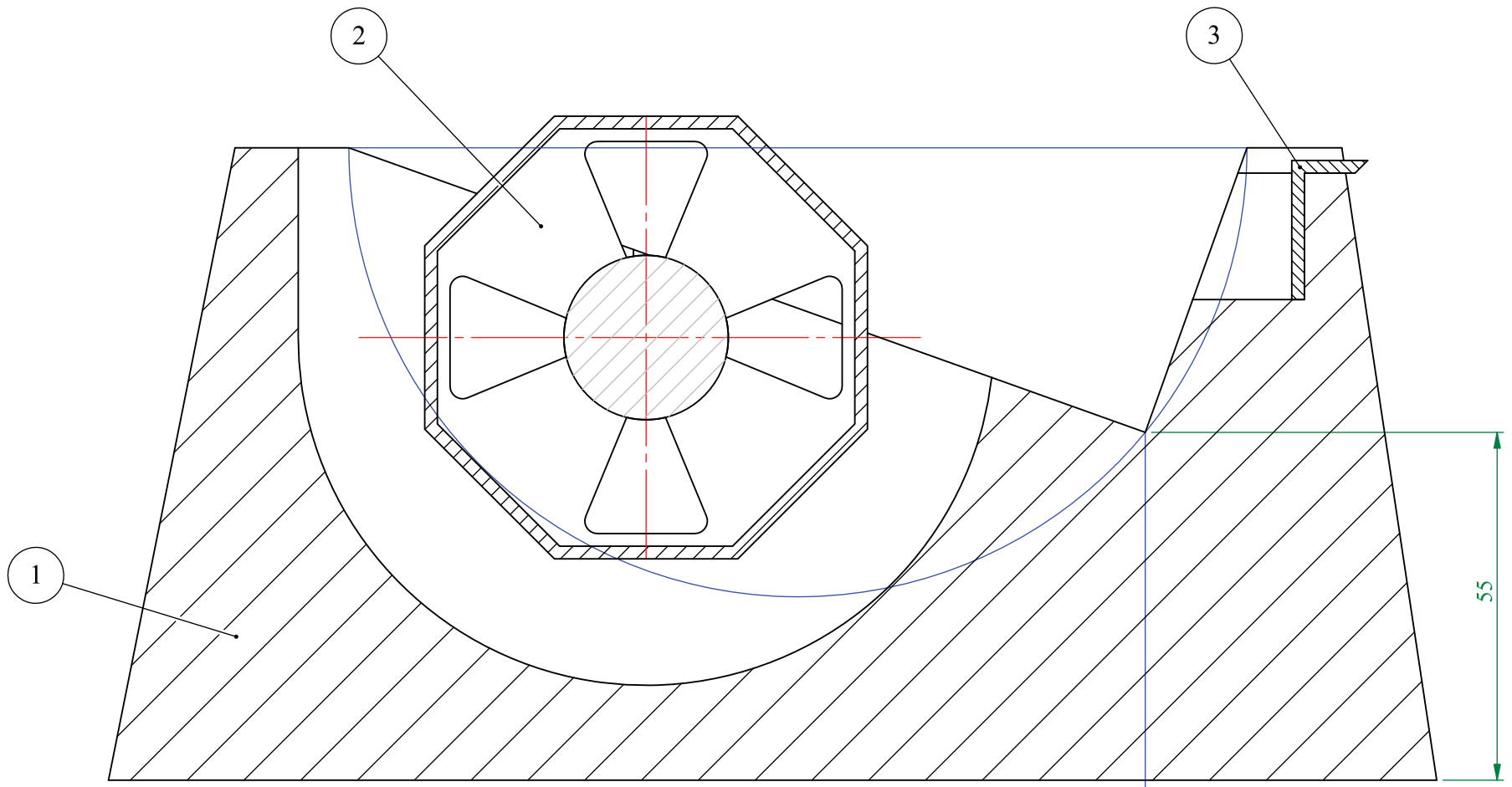

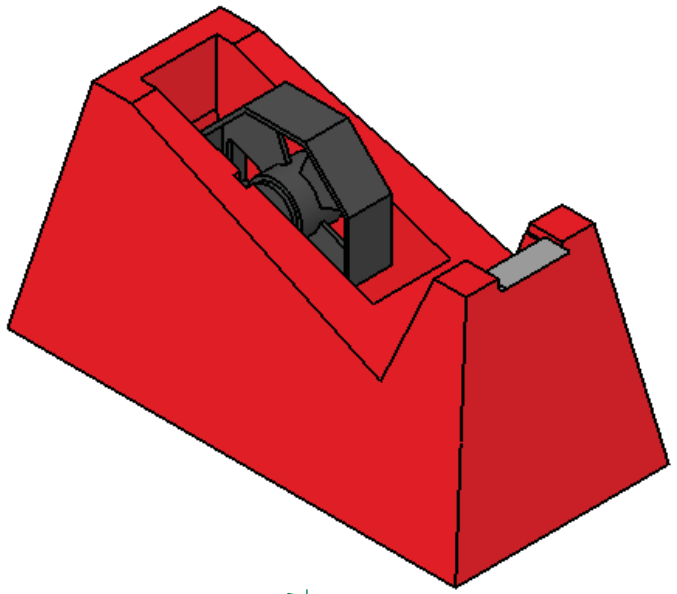

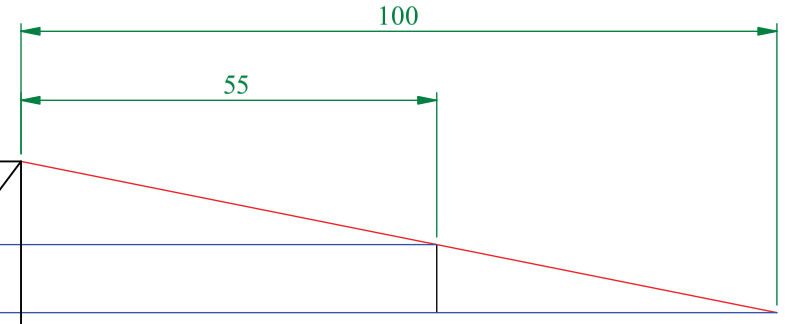

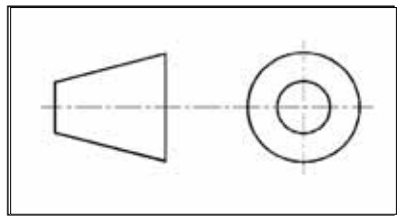

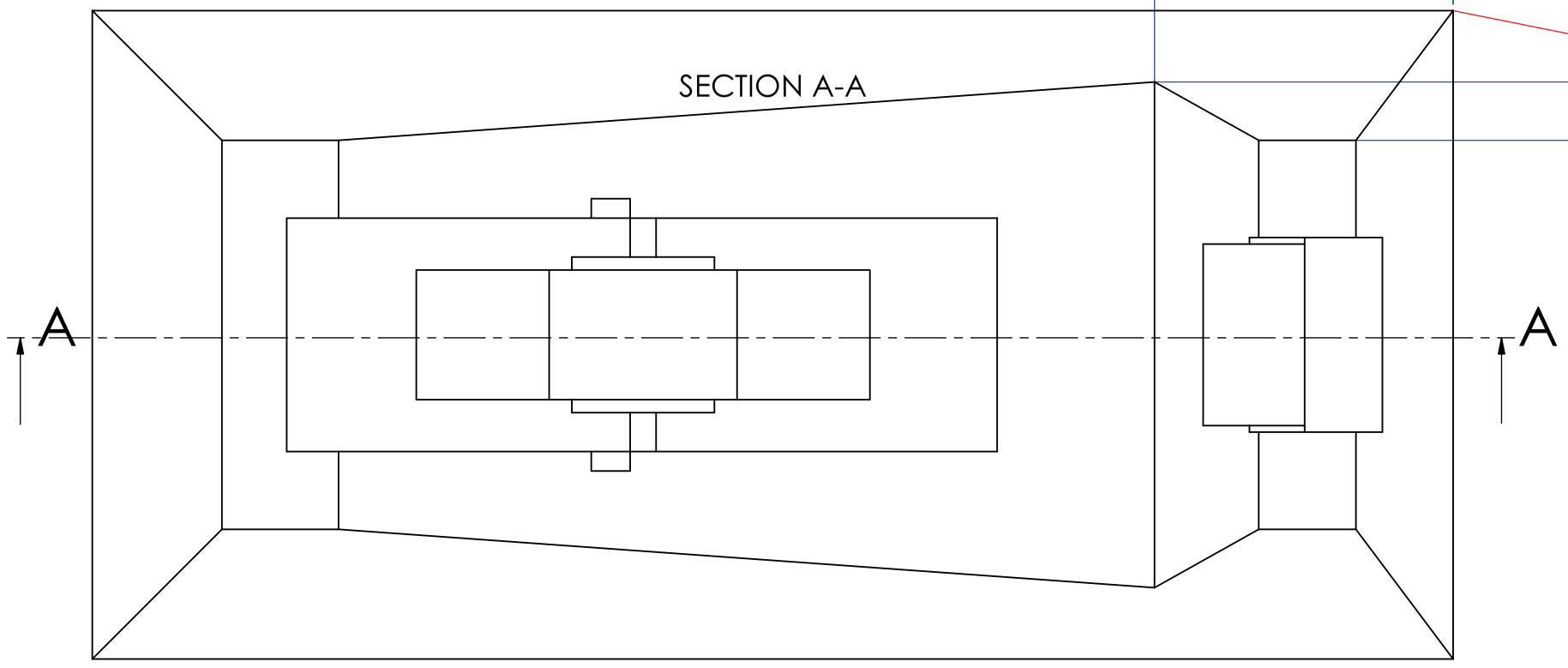

PART	NAME	NO. REQUIRED
1	Body	1
2	Insert	1
3	Blade	1

TECHNOLOGY SUBJECTS SUPPORT SERVICE

DESIGN & COMMUNICATION GRAPHICS

Topic.....

NAME: _____ **DATE:** _____

Details of a television mounting bracket asssembly are given with the parts list tabulated on the bottom left. A 3D graphic of the parts is also given.

Using a scale of 1:1, draw the elevation, end elevation and project a sectional plan C-C of the parts fully assembled. Hidden detail is not required.

Determine the maximum degree of rotation of the television bracket when mounted to the wall, without the television attached.

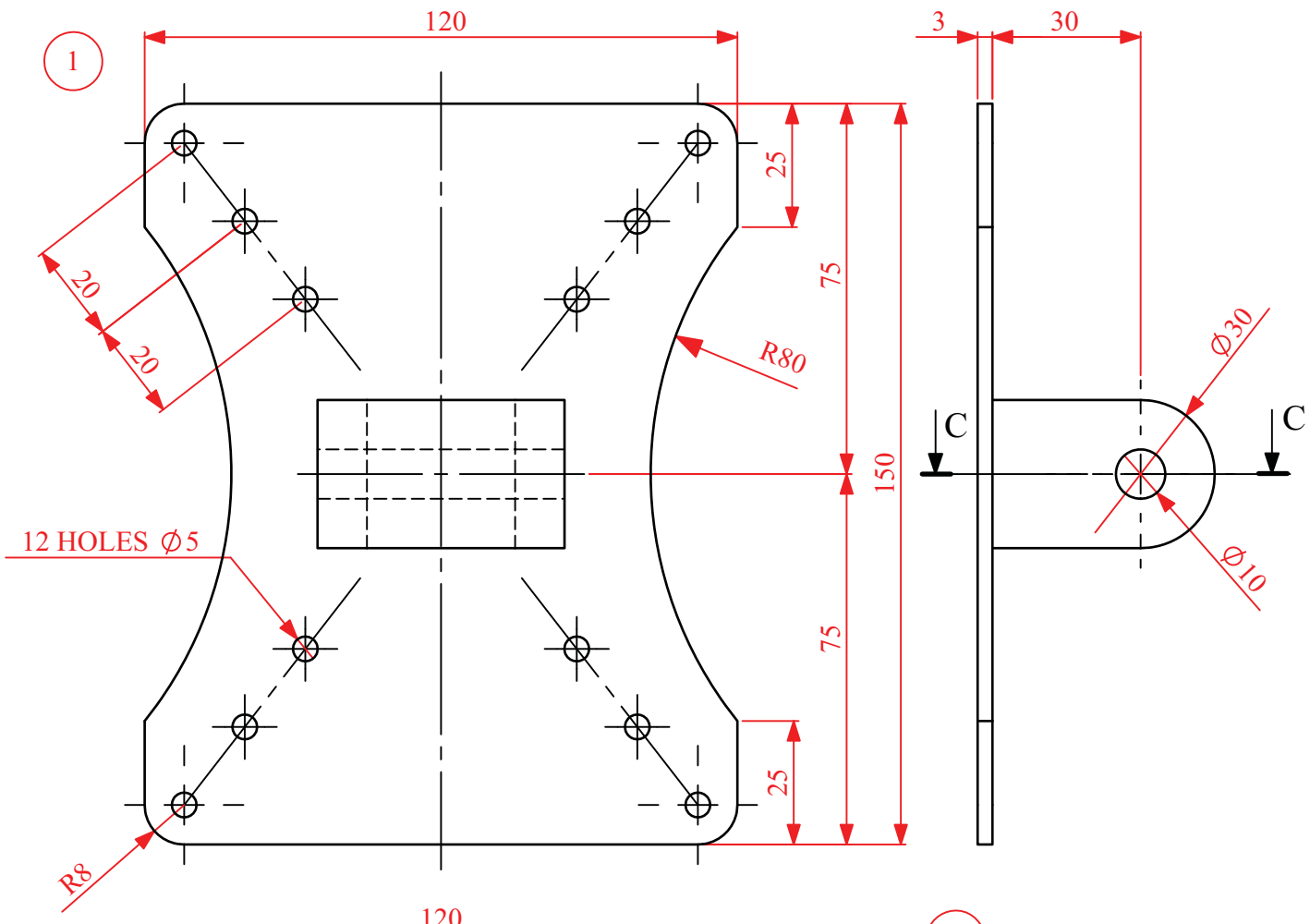

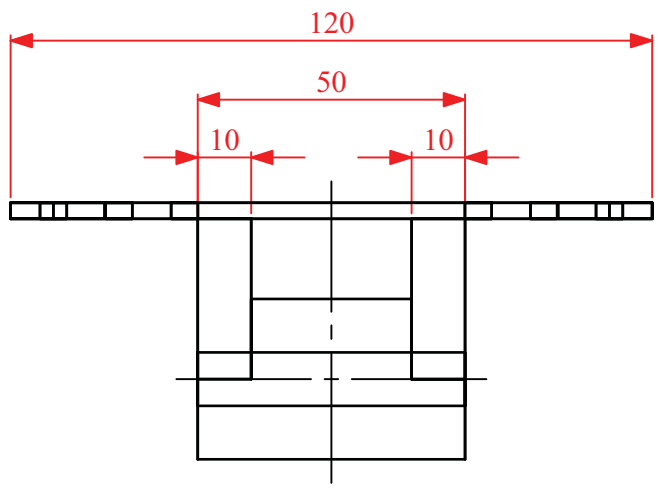

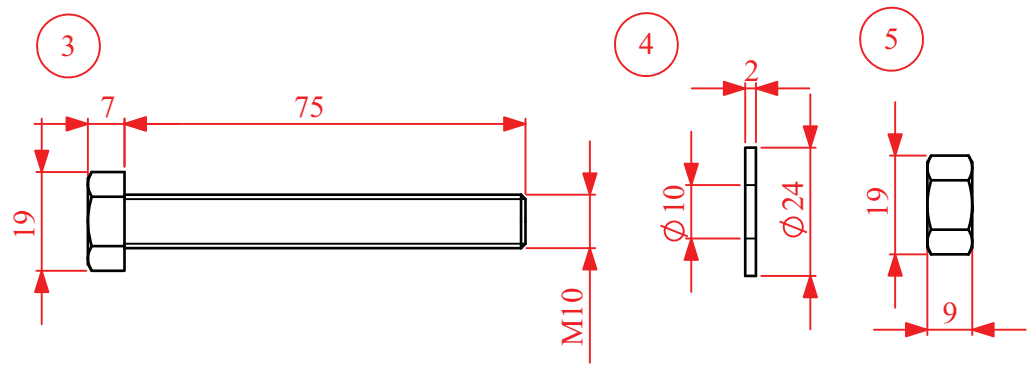

PART	NAME	NO. REQUIRED
1	TV Bracket	1
2	Wall Bracket	1
3	M10 Bolt	1
4	Washer	1
5	M10 Nut	1

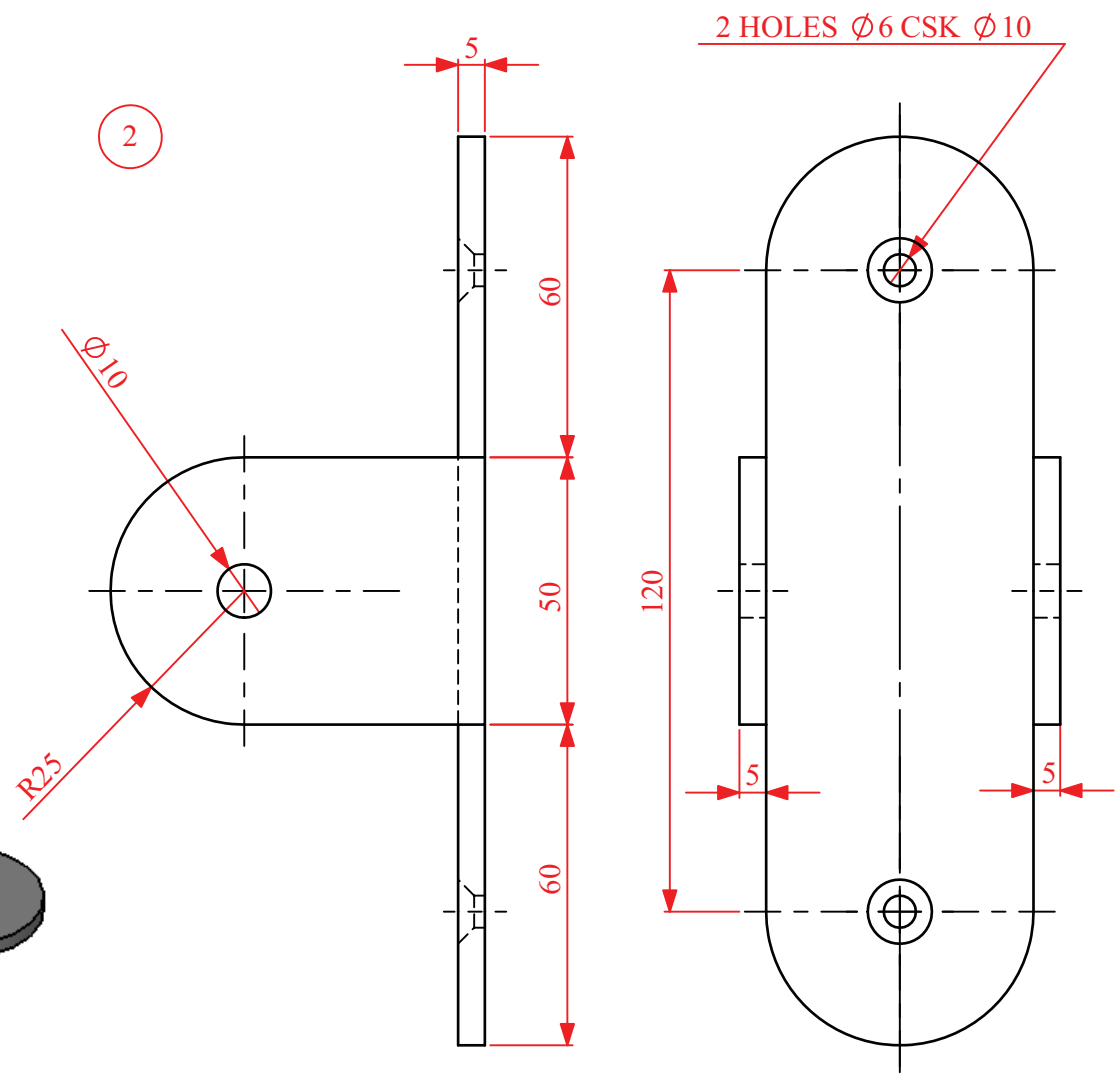

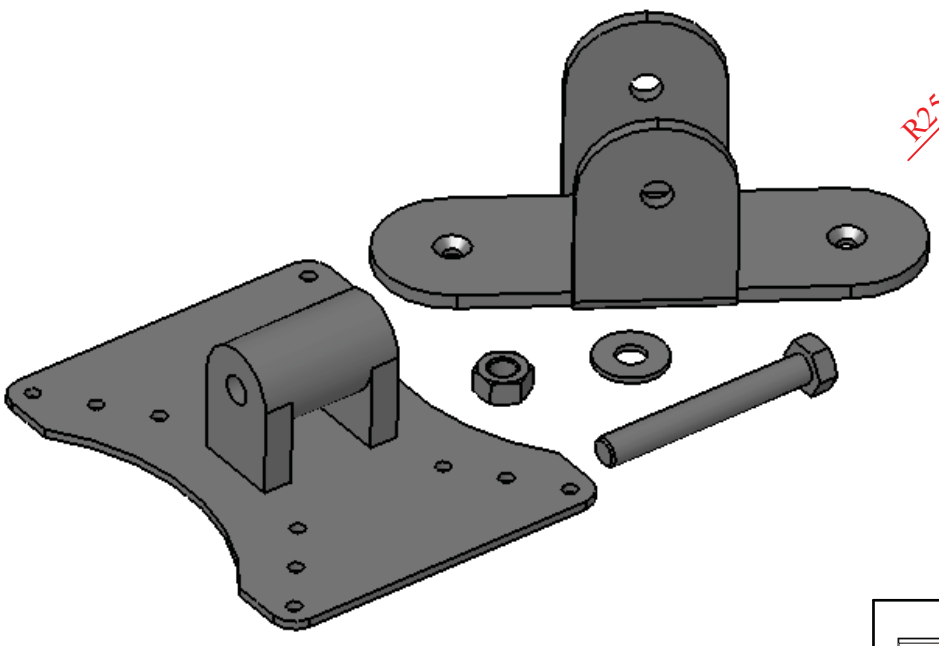

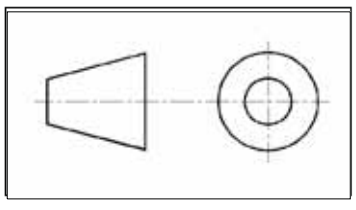

TECHNOLOGY SUBJECTS SUPPORT SERVICE

DESIGN & COMMUNICATION GRAPHICS

Topic.....

NAME: _____ **DATE:** _____

Details of a television mounting bracket asssembly are given with the parts list tabulated on the bottom left. A 3D graphic of the parts is also given.

Using a scale of 1:1, draw the elevation, end elevation and project a sectional plan C-C of the parts fully assembled. Hidden detail is not required.

Determine the maximum degree of rotation of the television bracket when mounted to the wall, without the television attached.

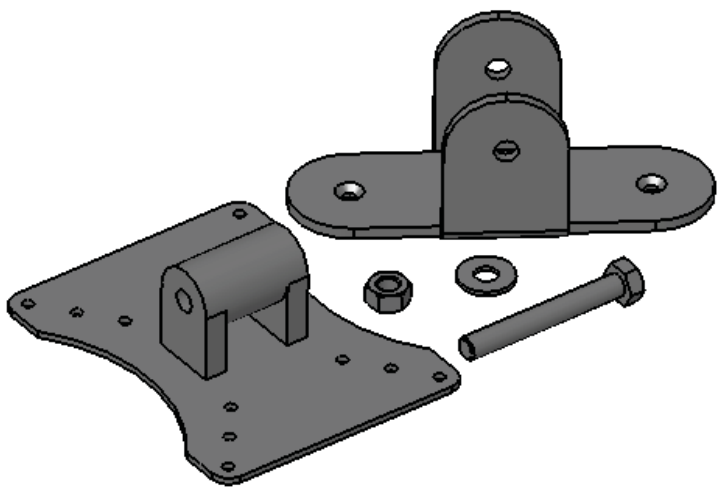

TECHNOLOGY SUBJECTS SUPPORT SERVICE

DESIGN & COMMUNICATION GRAPHICS

Topic.....

NAME: _____ **DATE:** _____

Details of a television mounting bracket asssembly are given with the parts list tabulated on the bottom left. A 3D graphic of the parts is also given.

Using a scale of 1:1, draw the elevation, end elevation and project a sectional plan C-C of the parts fully assembled. Hidden detail is not required.

Determine the maximum degree of rotation of the television bracket when mounted to the wall, <u>without</u> the television attached.

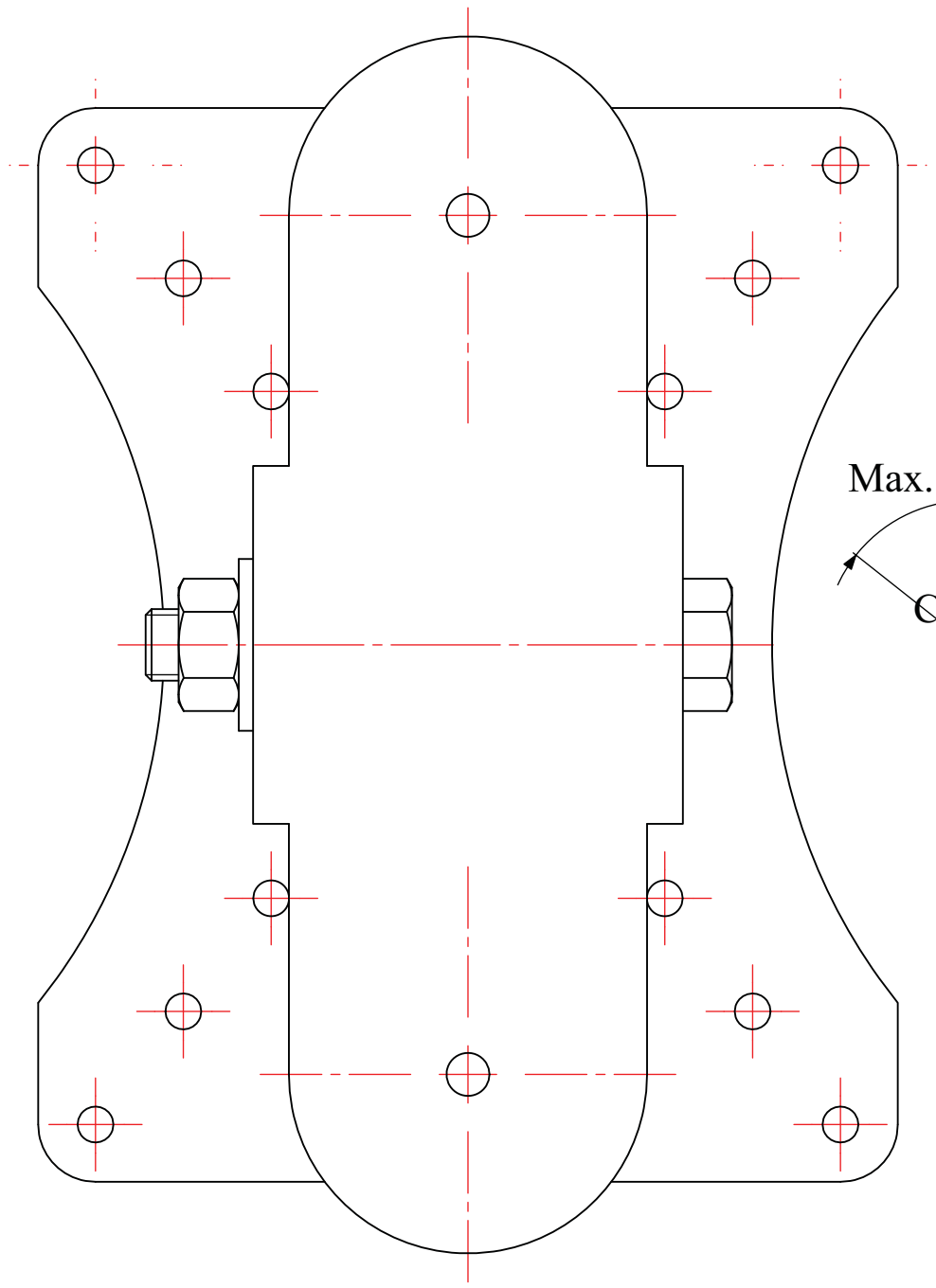

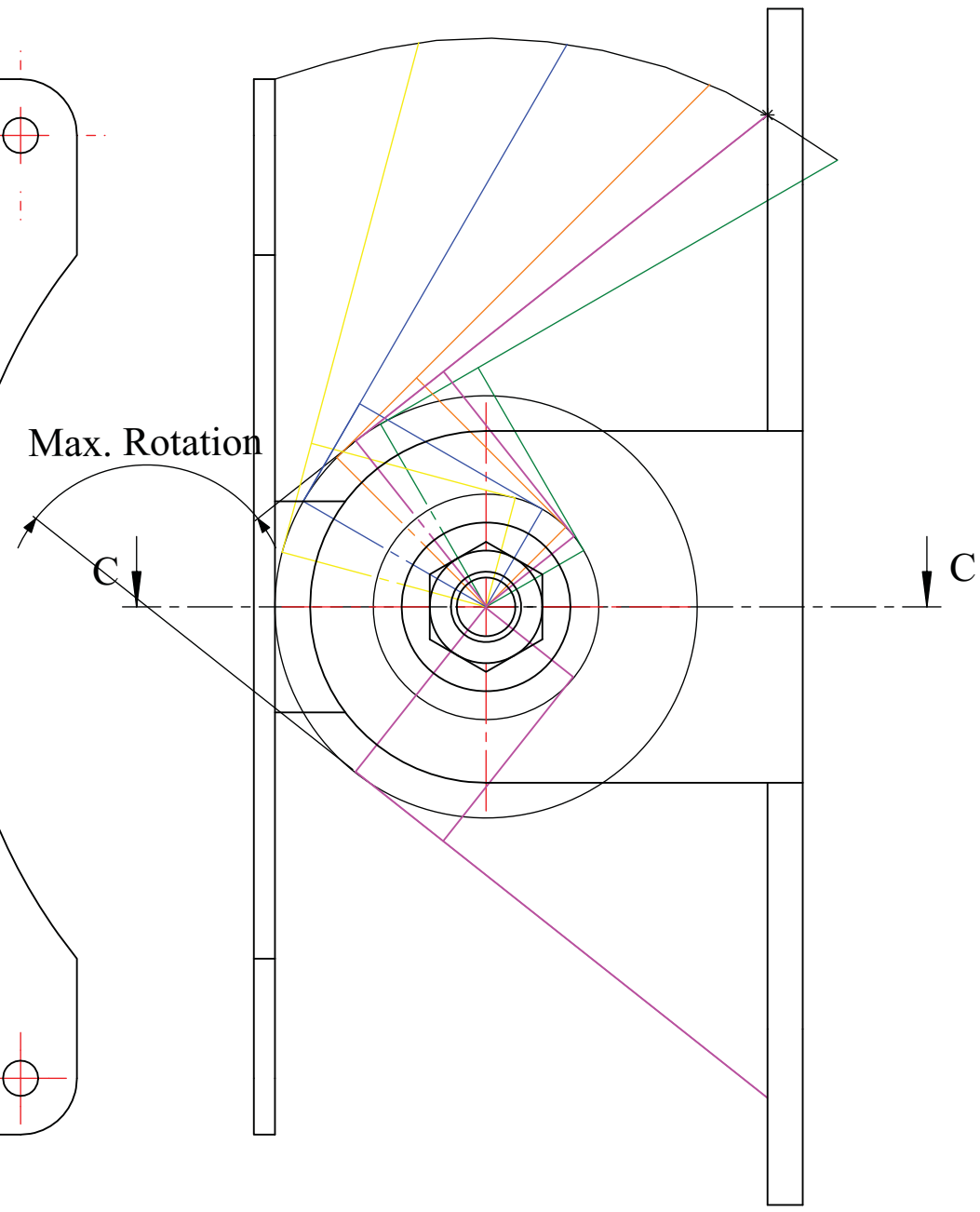

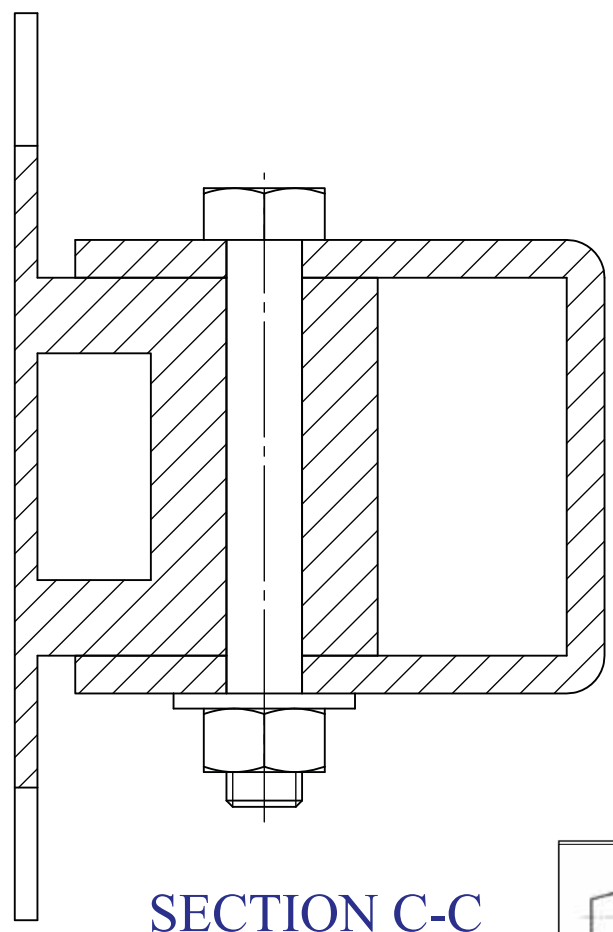

SECTION C-C
SCALE 1 : 1

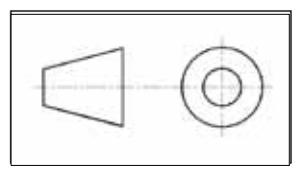

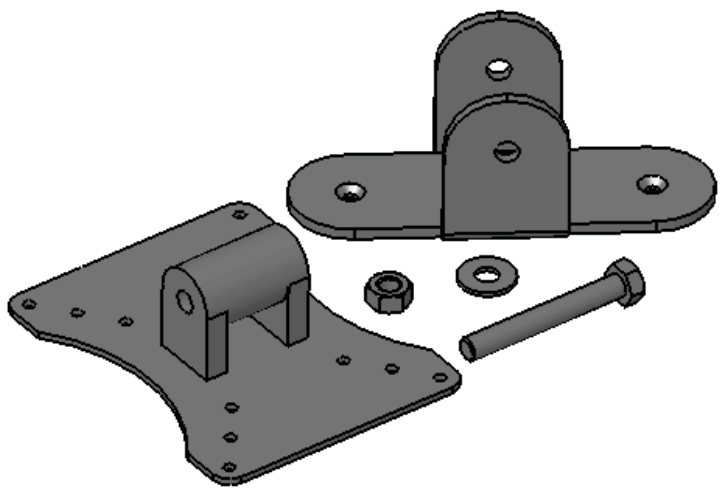

TECHNOLOGY SUBJECTS SUPPORT SERVICE

DESIGN & COMMUNICATION GRAPHICS

Topic.....

NAME: _____ **DATE:** _____

Details of a model See-saw assembly are given with the parts list tabulated below left.

(a) On the accompanying sheet, using a scale of 1:1, draw the elevation and sectional end elevation B - B, of the assembled see-saw, when the board is in a horizontal position.

(b) Plot the locus of point P, on the bottom of the board, as it moves from the horizontal position to ground level.

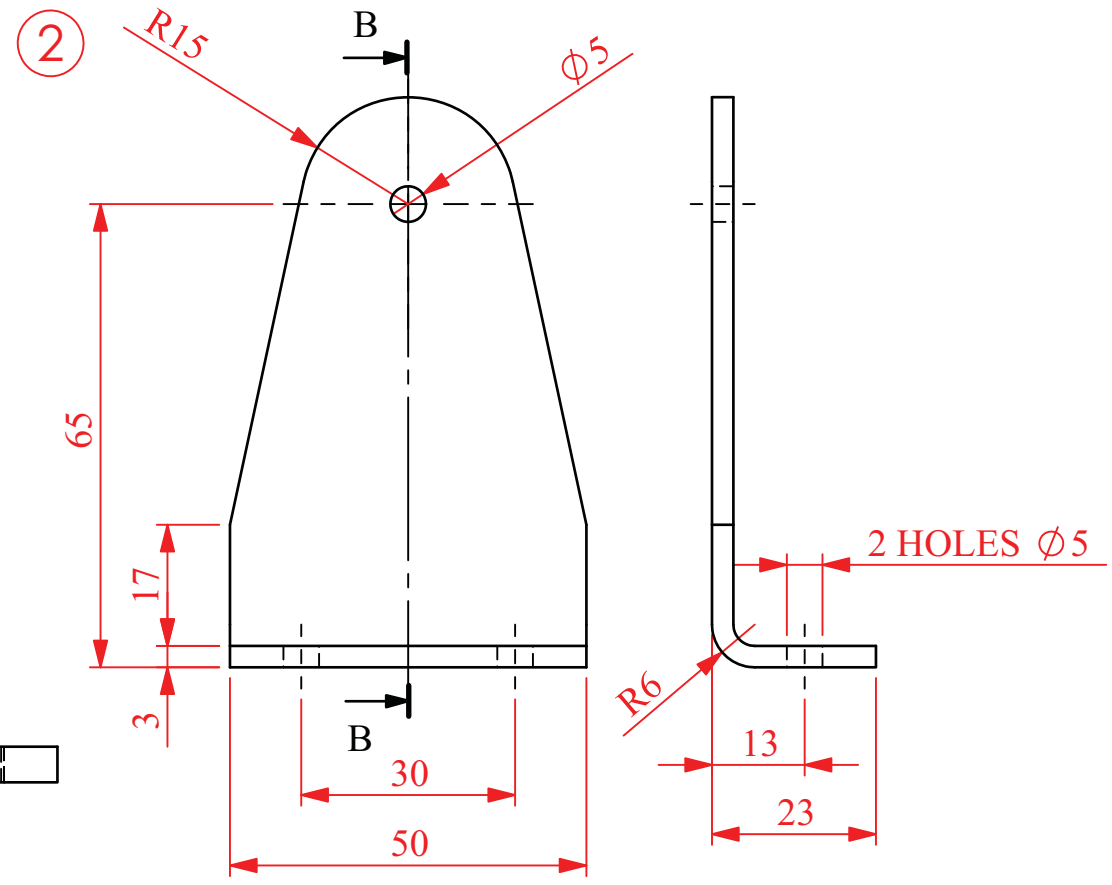

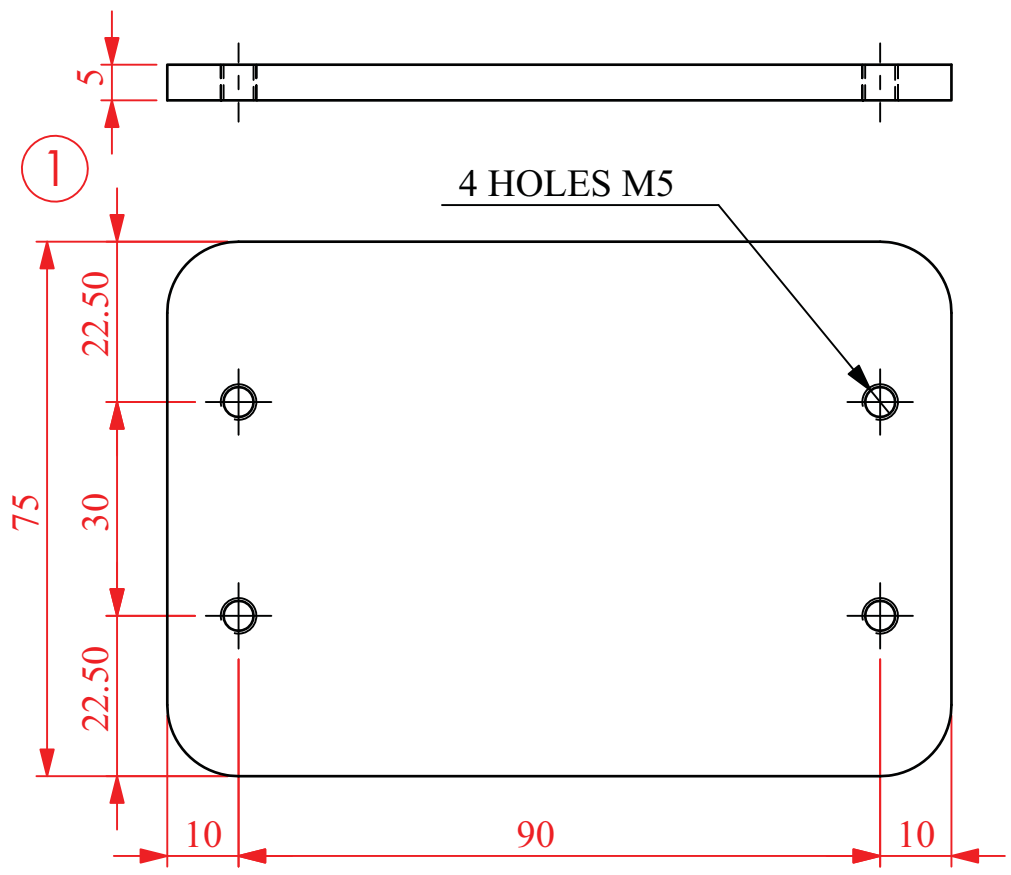

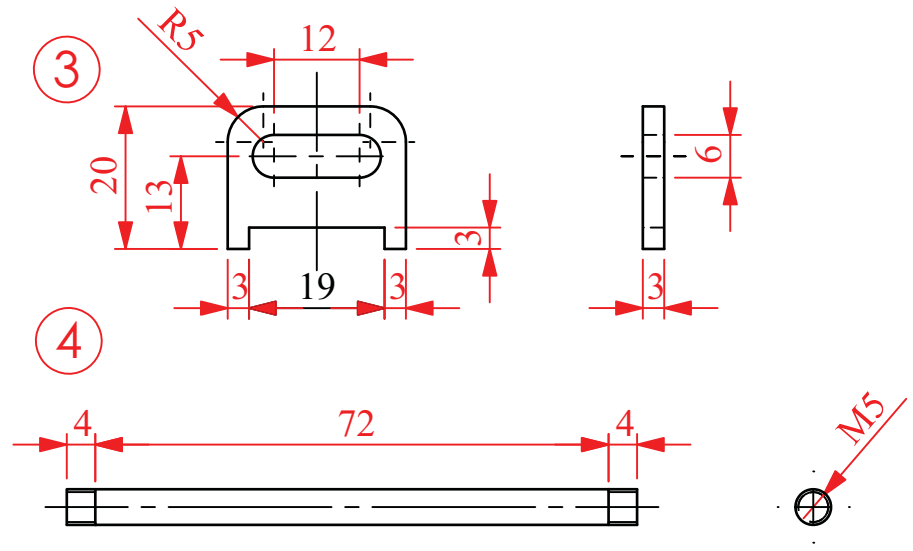

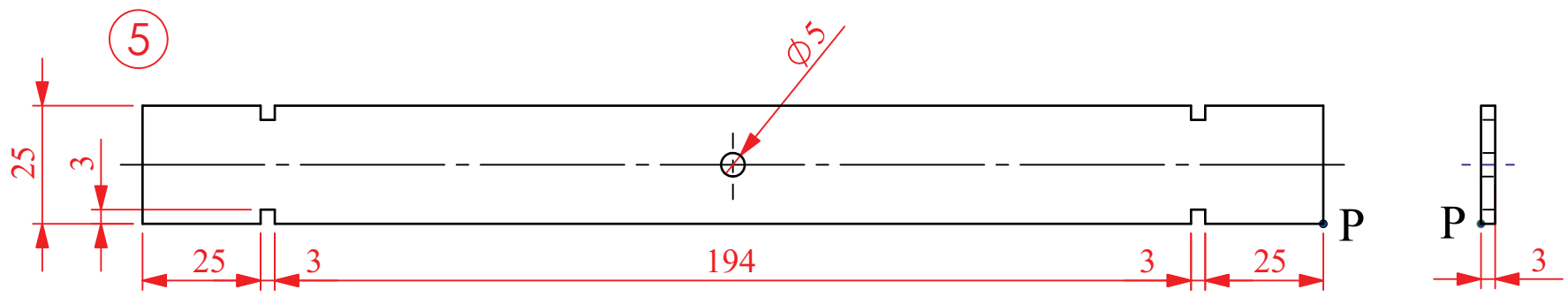

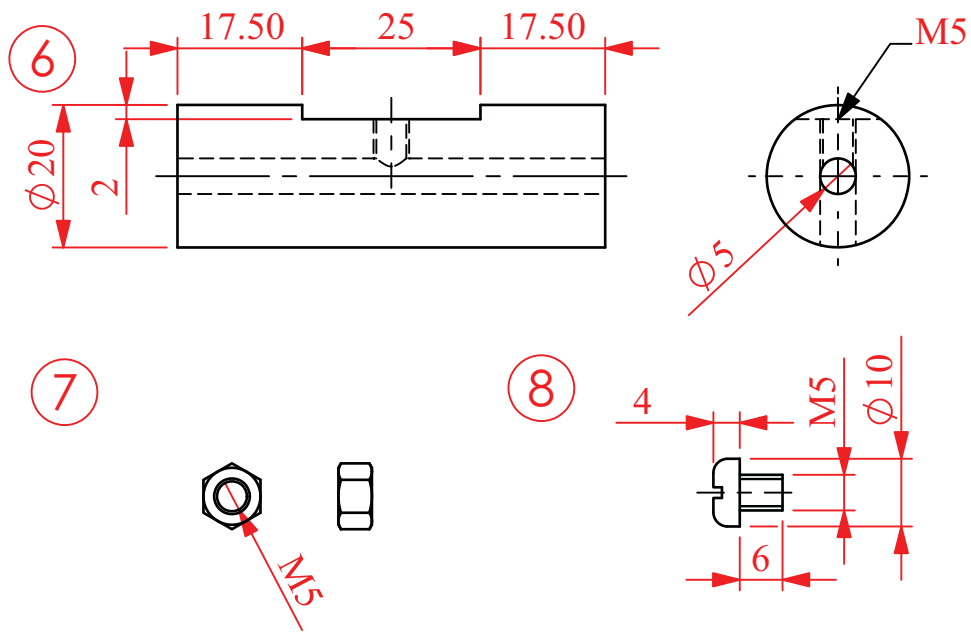

PART	NAME	NO. REQUIRED
1	Base	1
2	Support	2
3	Handle	2
4	Axle	1
5	Board	1
6	Swivel	1
7	M5 Nut	2
8	M5 Screw	5

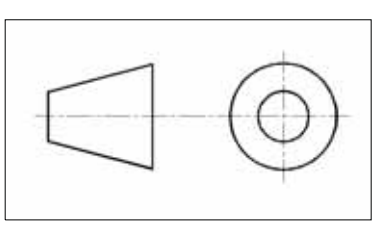

TECHNOLOGY SUBJECTS SUPPORT SERVICE

DESIGN & COMMUNICATION GRAPHICS

Topic.....

NAME: _____ **DATE:** _____

Details of a model See-saw assembly are given with the parts list tabulated below left.

(a) On the accompanying sheet, using a scale of 1:1, draw the elevation and sectional end elevation B - B, of the assembled see-saw, when the board is in a horizontal position.

(b) Plot the locus of point P, on the bottom of the board, as it moves from the horizontal position to ground level.

PART	NAME	NO. REQUIRED
1	Base	1
2	Support	2
3	Handle	2
4	Axle	1
5	Board	1
6	Swivel	1
7	M5 Nut	2
8	M5 Screw	5

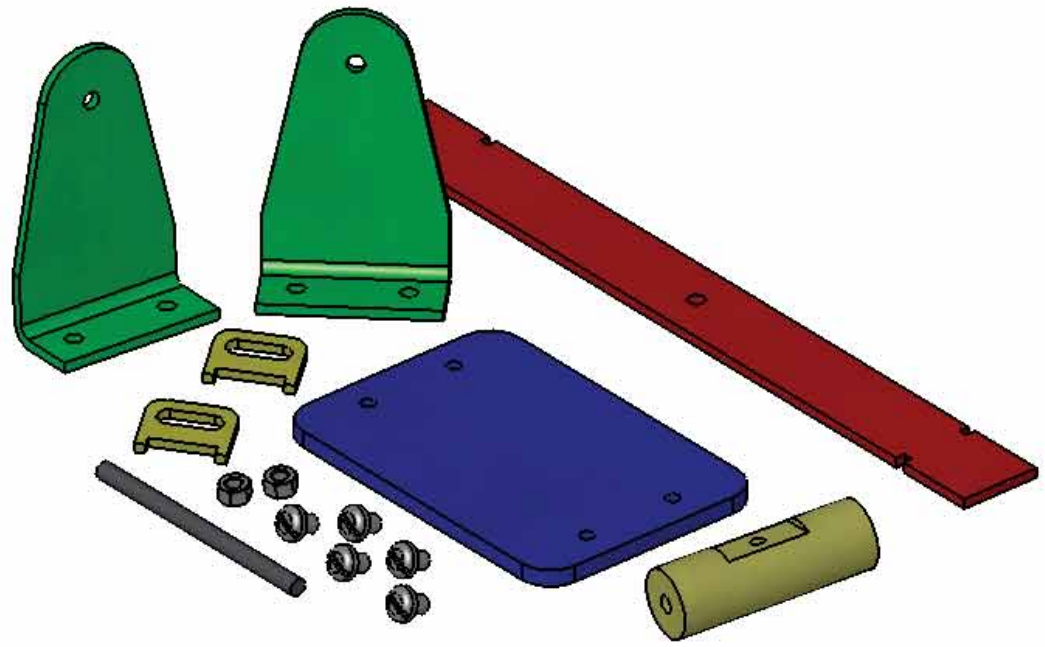

TECHNOLOGY SUBJECTS SUPPORT SERVICE

DESIGN & COMMUNICATION GRAPHICS

Topic.....

NAME: _____ **DATE:** _____

Details of a model See-saw assembly are given with the parts list tabulated below left.

(a) On the accompanying sheet, using a scale of 1:1, draw the elevation and sectional end elevation B - B, of the assembled see-saw, when the board is in a horizontal position.

(b) Plot the locus of point P, on the bottom of the board, as it moves from the horizontal position to ground level.

PART	NAME	NO. REQUIRED
1	Base	1
2	Support	2
3	Handle	2
4	Axle	1
5	Board	1
6	Swivel	1
7	M5 Nut	2
8	M5 Screw	5

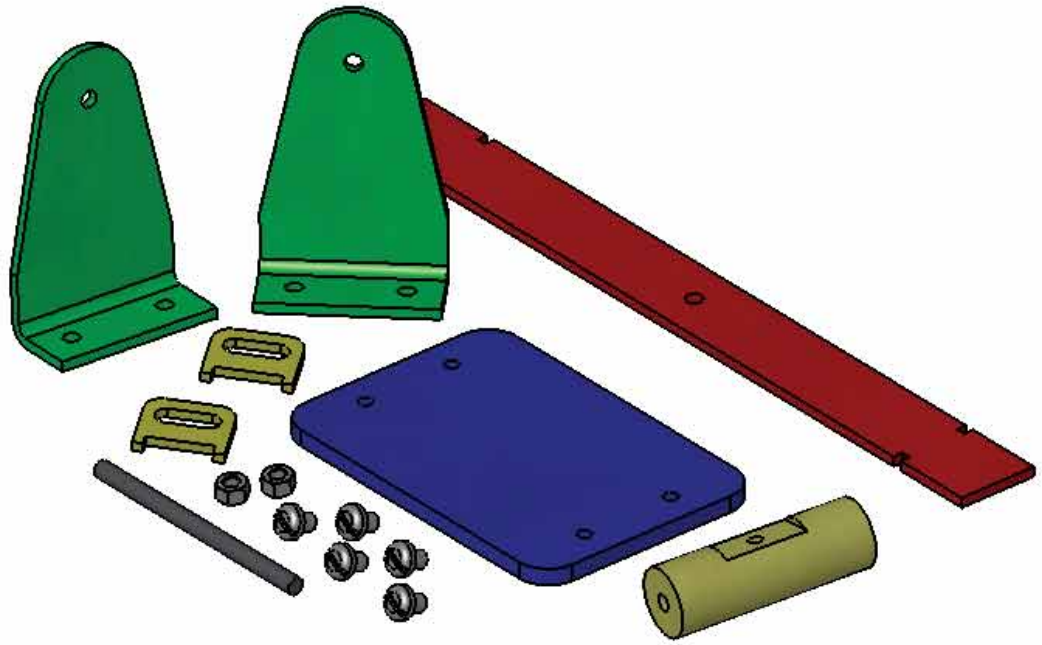

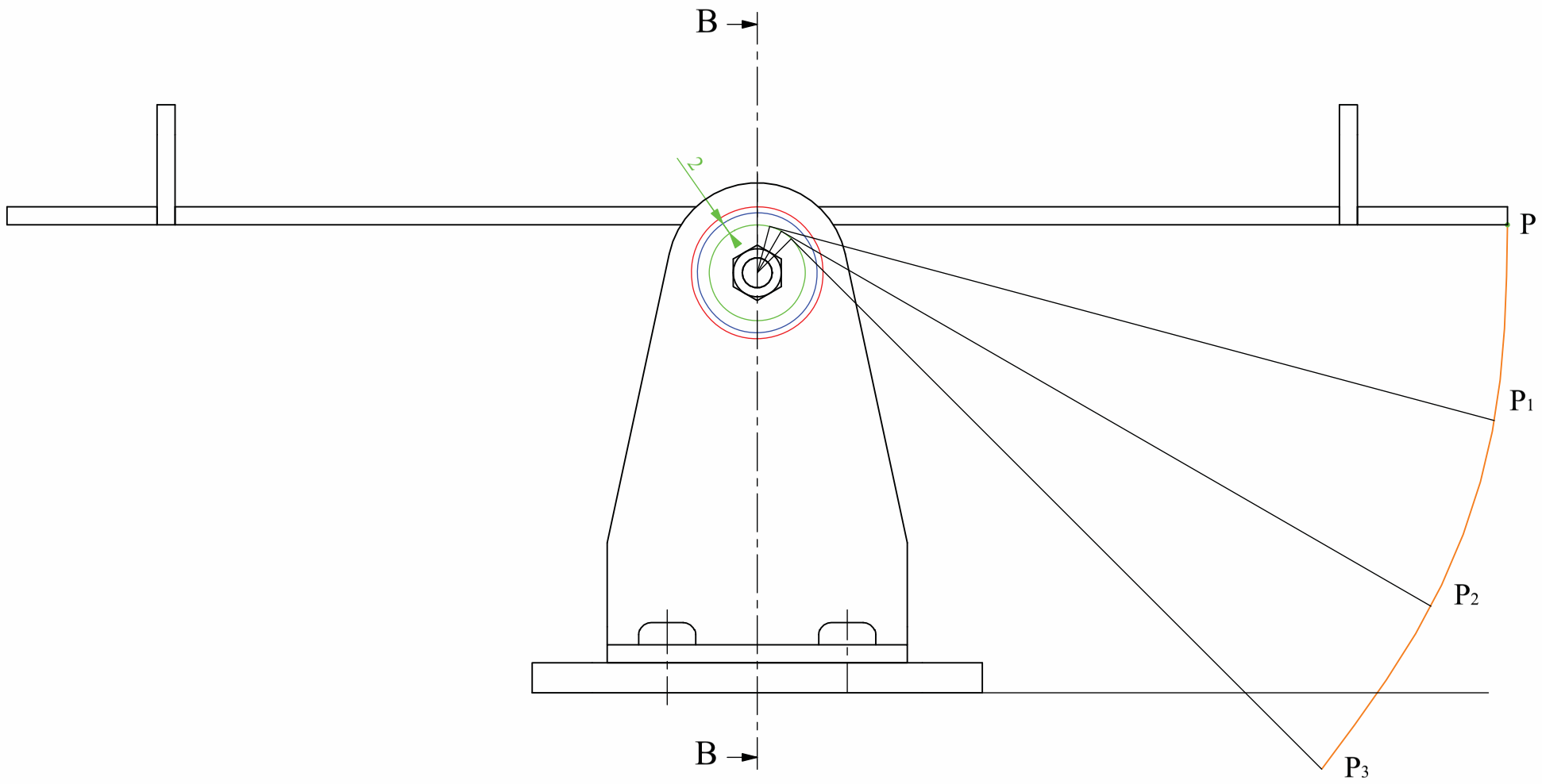

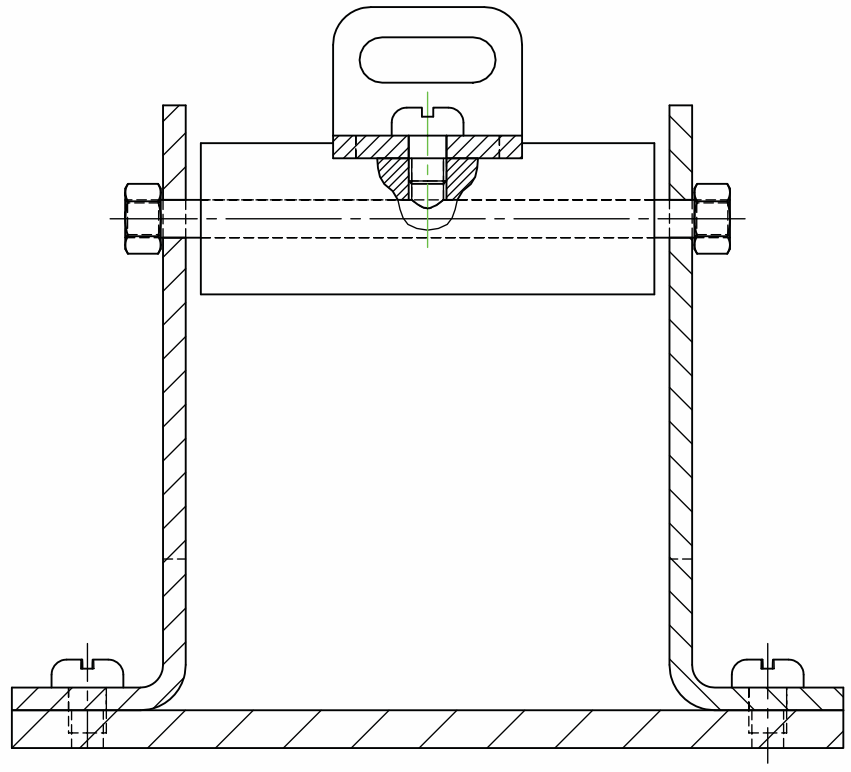

SECTION B-B

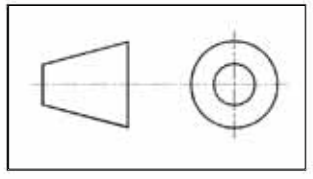

TECHNOLOGY SUBJECTS SUPPORT SERVICE

DESIGN & COMMUNICATION GRAPHICS

Topic.....

NAME: _____ **DATE:** _____

Details of a Toy Train assembly are given below along with the parts list. A 3D graphic of the assembly is also shown.

(a) Using a scale of 1:1, draw the end elevation and project the sectional elevation A-A when the smoke stack is at its lowest point.

(b) Identify the maximum displacement of the smoke stack

PART	NAME	NO. REQUIRED
1	Boiler	1
2	Cab	1
3	Chassis	1
4	Cam	1
5	Dowel	4
6	Breather	1
7	Follower	1
8	Smoke Stack	1
9	Wheel	4
10	Axle	2

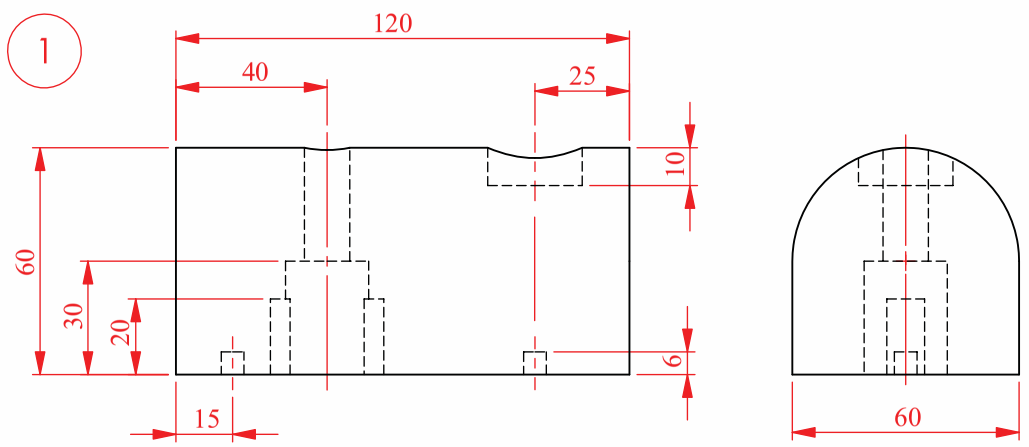

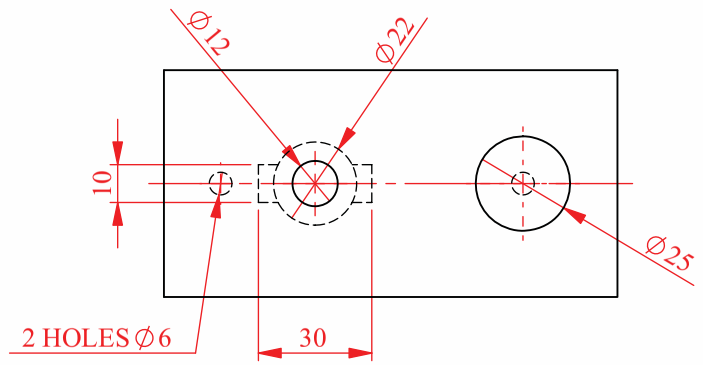

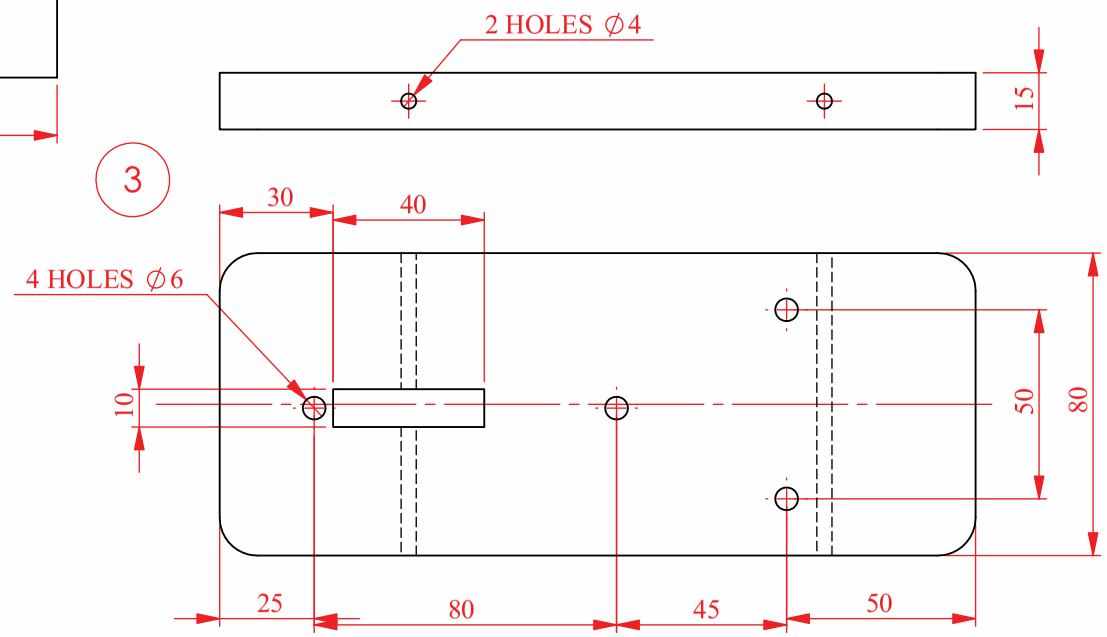

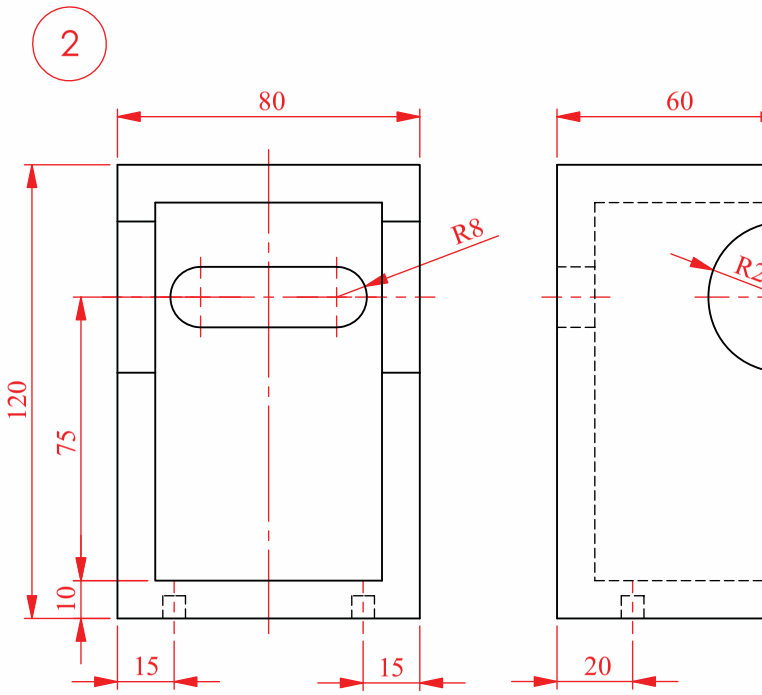

WALL THICKNESS 10MM ALL ROUND

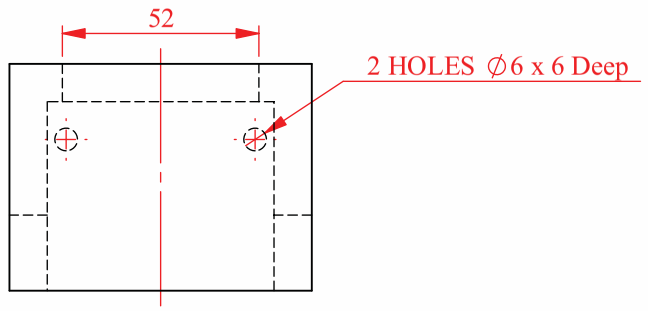

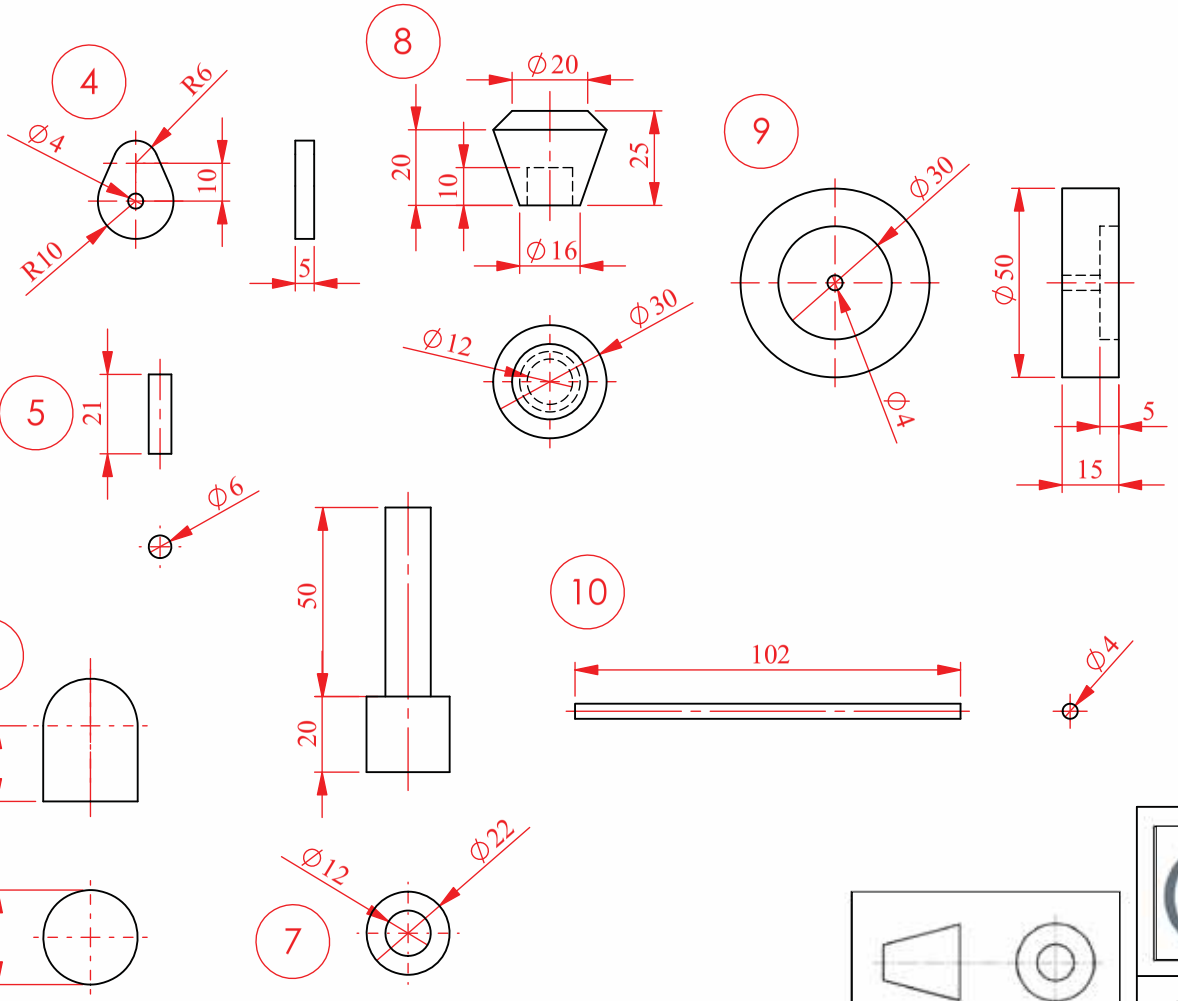

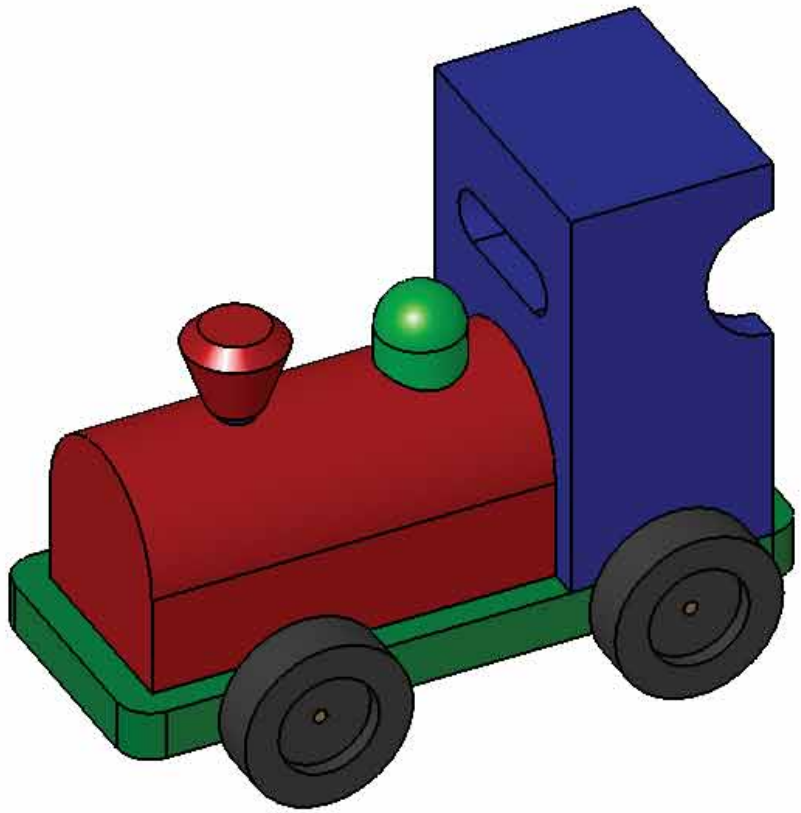

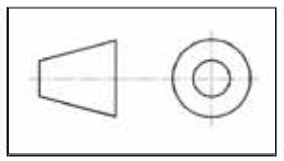

TECHNOLOGY SUBJECTS SUPPORT SERVICE

DESIGN & COMMUNICATION GRAPHICS

Topic.....

NAME: _____ **DATE:** _____

Details of a Toy Train assembly are given along with the parts list. A 3D graphic of the assembly is also shown.

(a) Using a scale of 1:1, draw the end elevation and project the sectional elevation A-A of the assembled train when the smoke stack is at its lowest point.

(b) Identify the maximum displacement of the smoke stack

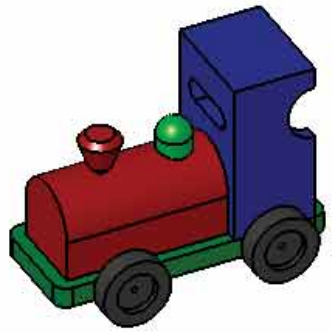

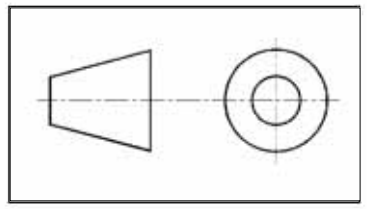

TECHNOLOGY SUBJECTS SUPPORT SERVICE

DESIGN & COMMUNICATION GRAPHICS

Topic.....

NAME: _____ **DATE:** _____

Details of a Toy Train assembly are given along with the parts list. A 3D graphic of the assembly is also shown.

(a) Using a scale of 1:1, draw the end elevation and project the sectional elevation A-A of the assembled train when the smoke stack is at its lowest point.

(b) Identify the maximum displacement of the smoke stack

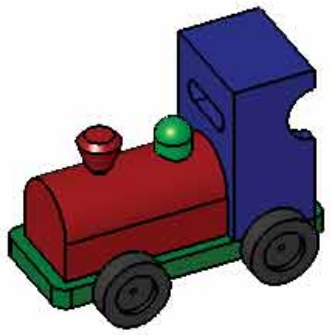

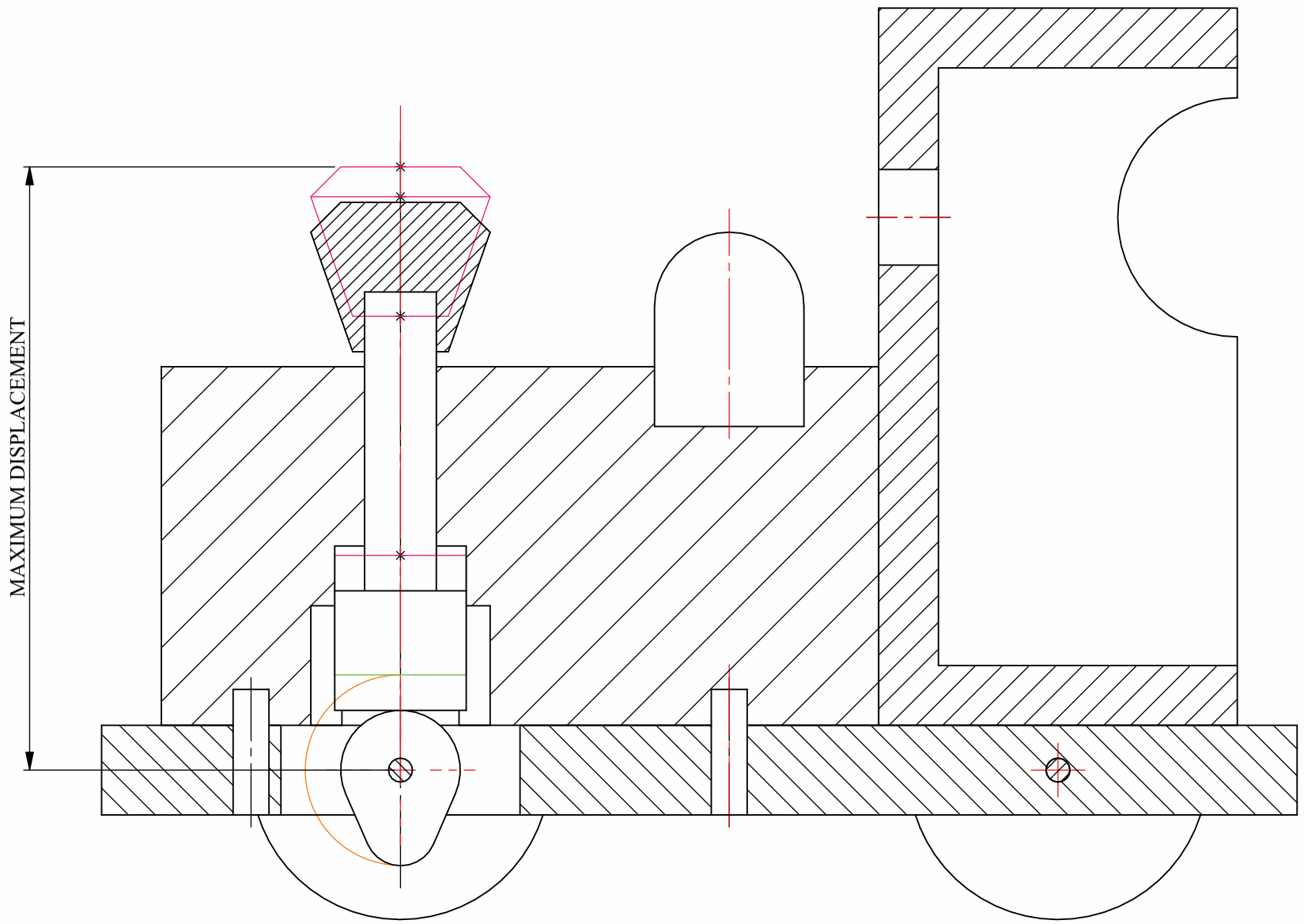

SECTION A-A

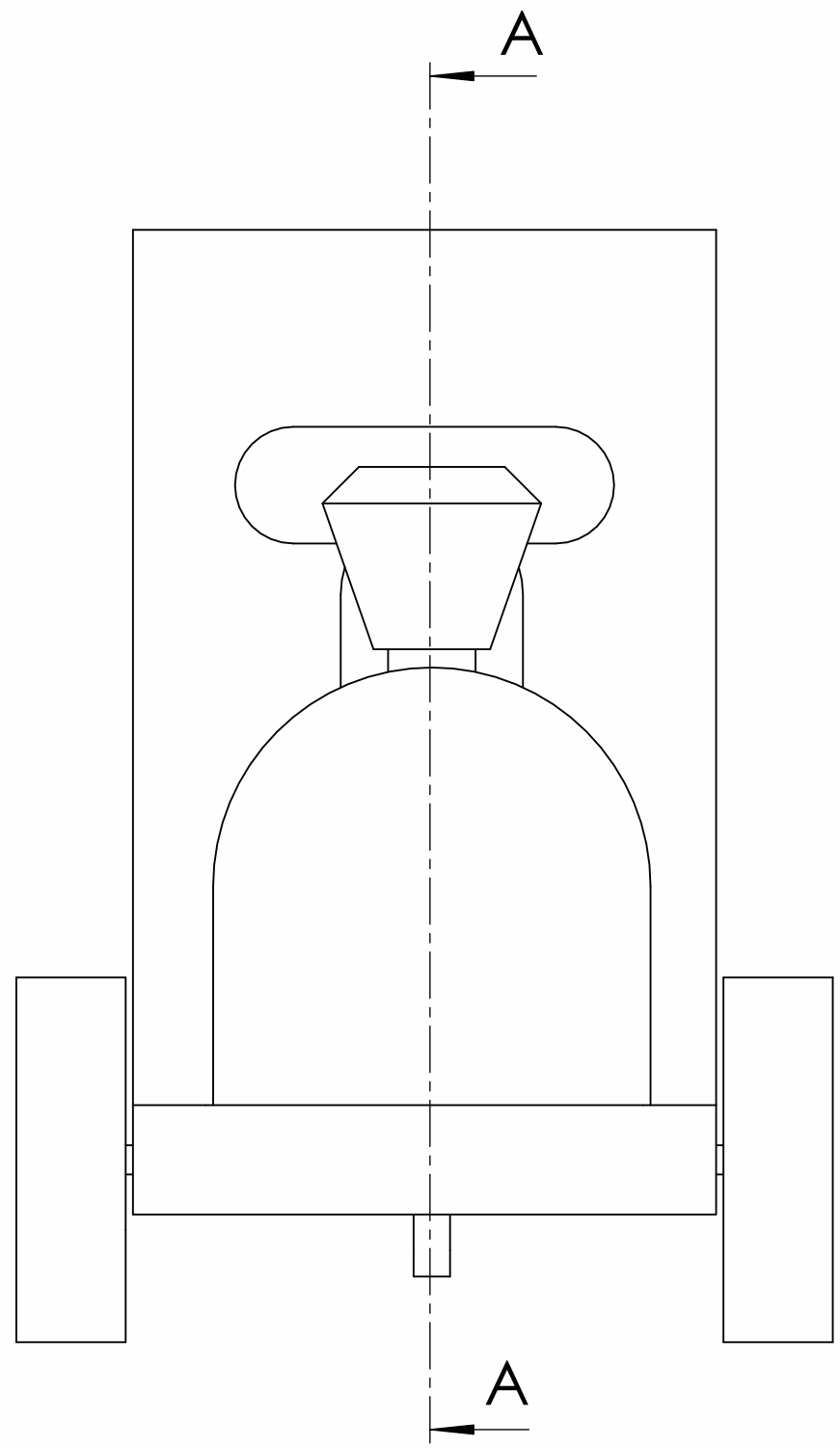

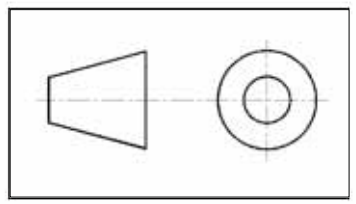

TECHNOLOGY SUBJECTS SUPPORT SERVICE

DESIGN & COMMUNICATION GRAPHICS

Topic.....

NAME: _____ **DATE:** _____

Details of a Toy Trumpet are shown below with the parts list tabulated on the right.

(a) On the accompanying sheet, using a scale of 1:1, draw the sectional elevation B-B of the assembled parts, when the plungers are located in their highest position.

(b) The horn is to be modified such that it shape is based on a parabola inscribed in a rectangle. A half plan is presented along with the rectangle ABCD. Construct the parabola thereby completing the external profile of the horn.

PART	NAME	NO. REQUIRED
1	Main Housing	1
2	Plunger	3
3	Horn	1
4	Mouth Piece	1
5	Spring	3

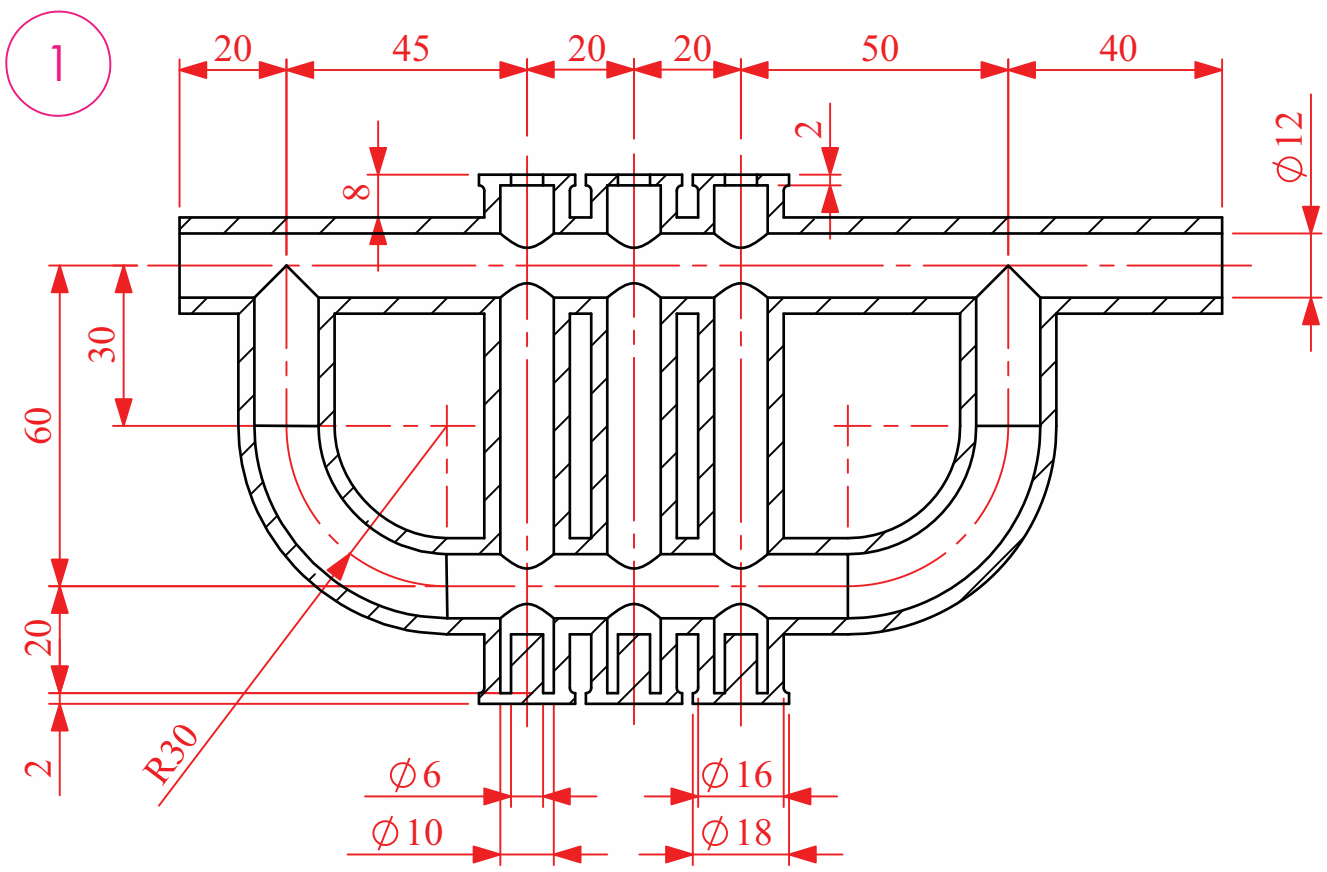

NOTE: WALL THICKNESS = 3mm

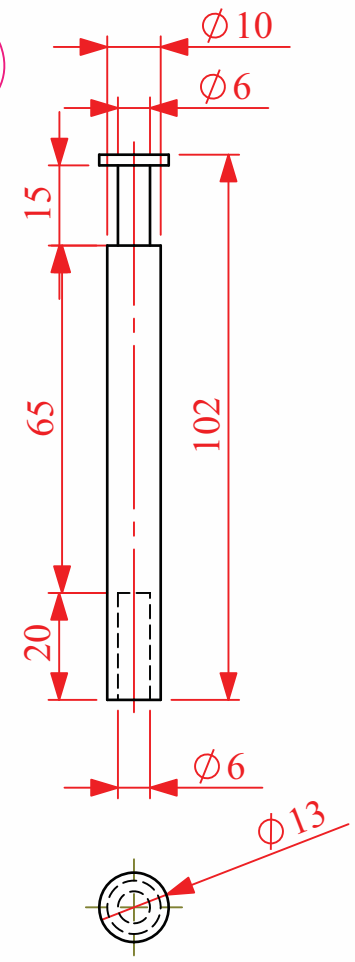

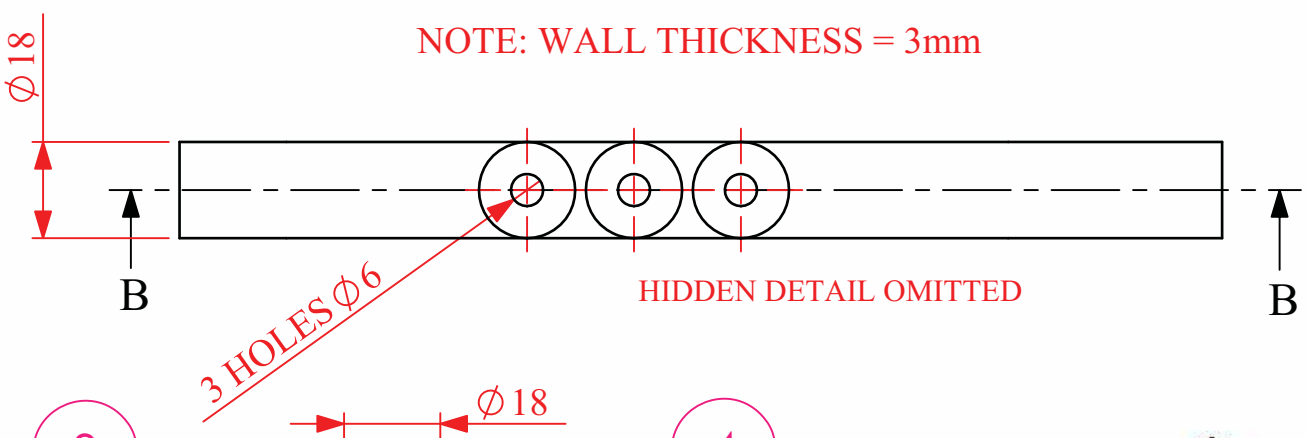

HIDDEN DETAIL OMITTED

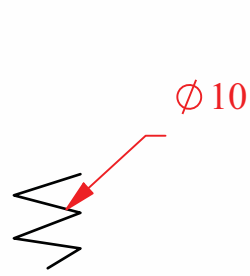

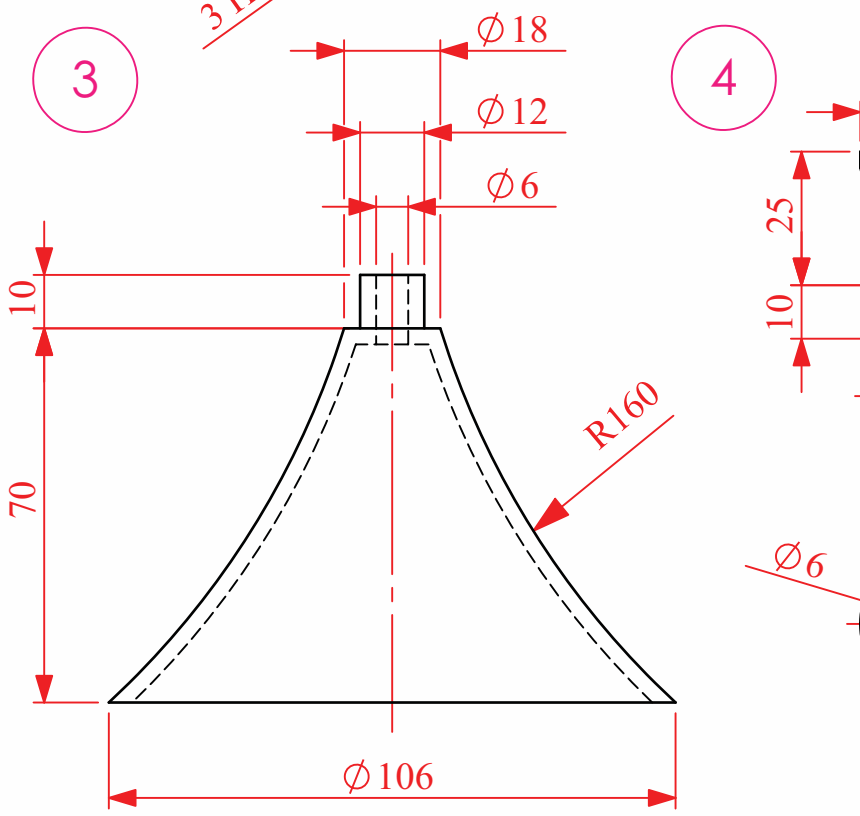

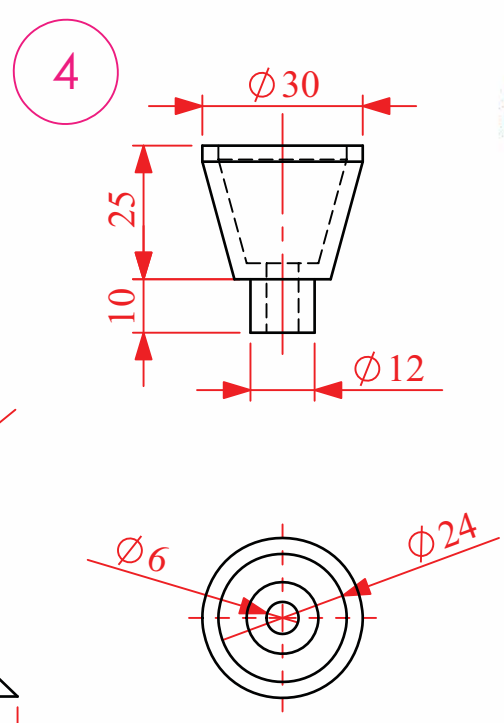

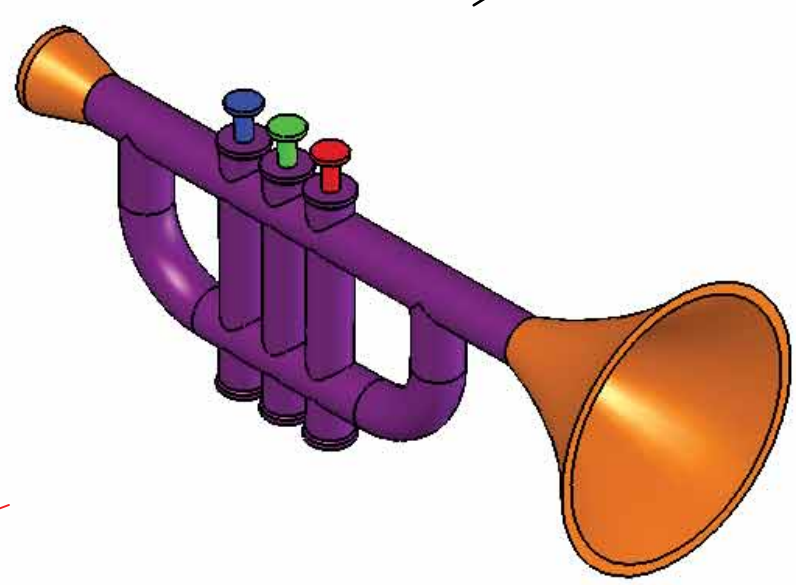

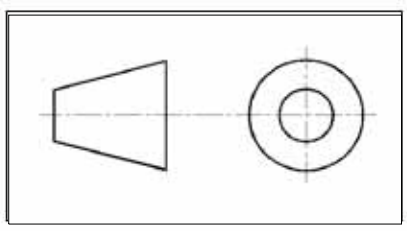

TECHNOLOGY SUBJECTS SUPPORT SERVICE

DESIGN & COMMUNICATION GRAPHICS

Topic.....

NAME: _____ **DATE:** _____

Details of a Toy Trumpet are shown below with the parts list tabulated on the right.

(a) On the accompanying sheet, using a scale of 1:1, draw the sectional elevation B-B of the assembled parts, when the plungers are located in their highest position.

(b) The horn is to be modified such that it shape is based on a parabola inscribed in a rectangle. A half plan is presented along with the recatangle ABCD. Construct the parabola thereby completing the external profile of the horn.

KEY POINTS

Only one view required

Assembly of parts at maximum limit position

Part modification - construction of parabolic curve

Symbol for half plan - mirror axis

45 degree lines of intersection indicate equal bore in pipes in main housing

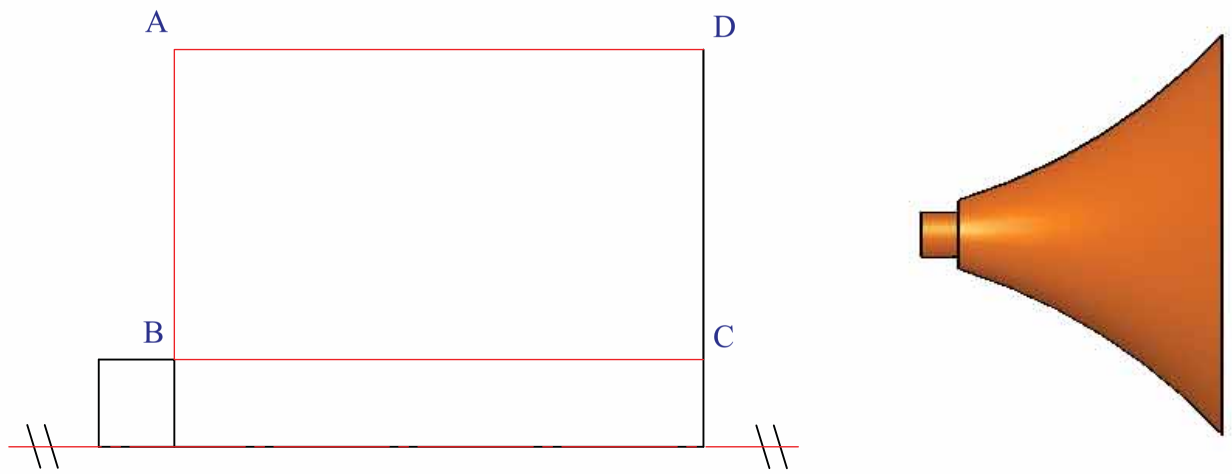

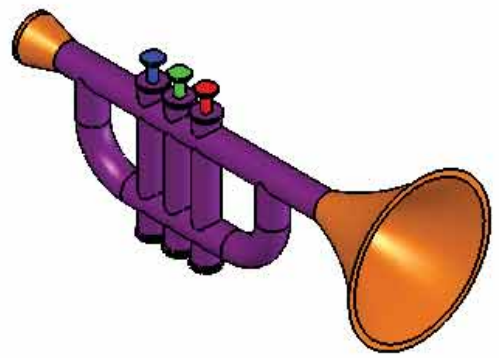

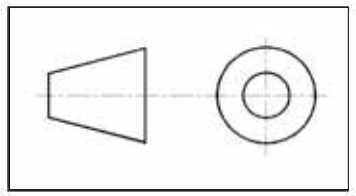

TECHNOLOGY SUBJECTS SUPPORT SERVICE

DESIGN & COMMUNICATION GRAPHICS

Topic.....

NAME: _____ **DATE:** _____

Details of a Toy Trumpet are shown below with the parts list tabulated on the right.

(a) On the accompanying sheet, using a scale of 1:1, draw the sectional elevation B-B of the assembled parts, when the plungers are located in their highest position.

(b) The horn is to be modified such that it shape is based on a parabola inscribed in a rectangle. A half plan is presented along with the recatangle ABCD. Construct the parabola thereby completing the external profile of the horn.

KEY POINTS

Only one view required

Assembly of parts at maximum limit position

Part modification - construction of parabolic curve

Symbol for half plan - mirror axis

45 degree lines of intersection indicate equal bore in pipes in main housing

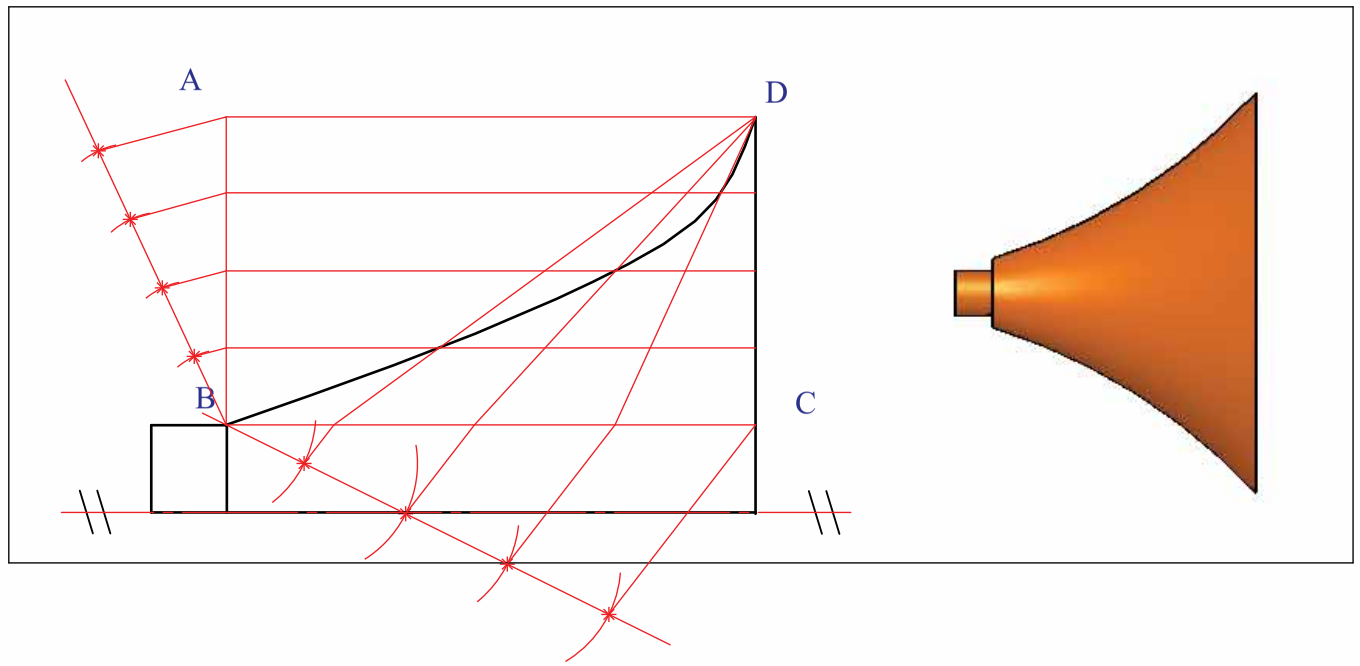

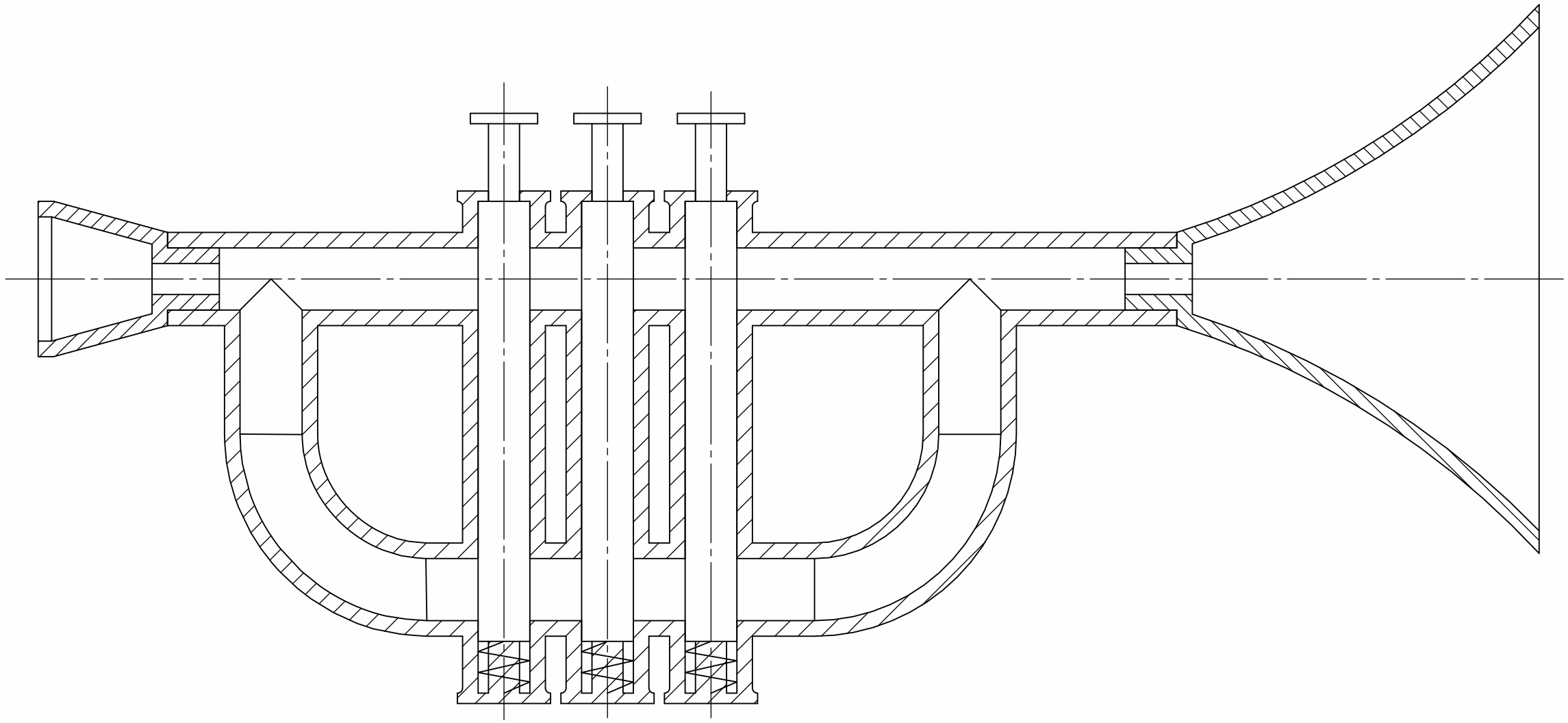

SECTION B-B
SCALE 1 : 1

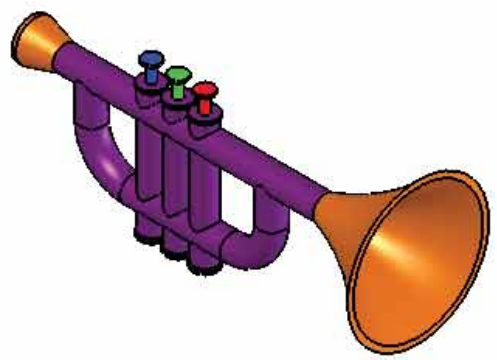

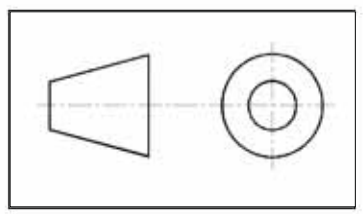

TECHNOLOGY SUBJECTS SUPPORT SERVICE

DESIGN & COMMUNICATION GRAPHICS

Topic.....

NAME: _____ **DATE:** _____